Modular | MUTE.

Book of Rooms

Contents

Intro 02

Categories 05

- Pods 06
- Rooms 37
- Hubs 57
- Partitions 94

Showrooms 117

Mute © 2026 All rights reserved

Mute Modular is the world's largest adaptable office system, designed to meet the evolving needs of modern workspaces.

It replaces traditional construction with a future-proof, flexible solution for creating office pods, rooms, lounge areas and more. A set of interchangable modules, a wide range of finishes, and a dedicated furniture collection make the possibilities for designing Mute Modular unit endless. To make this process easier—and to inspire you—we've created this Book of Rooms: a collection of fully equipped, ready-to-use units.

Mute © 2026 All rights reserved

The True Modularity

Every configuration featured in this Book of Rooms was built using the Mute Modular office system. The system consists of a carefully designed set of 29 standardized wall modules (101 cm and 50.5 cm), linked with patent-pending click-in technology for hassle-free, no-tool assembly.

Every module is prefabricated in our production facility using an advanced, automated assembly line. Thanks to rigorous quality control, we ensure exceptional consistency across all Mute Modular modules. This guarantees that, regardless of configuration, every space built within the system performs and looks identical in acoustic performance, durability, and visual appearance, ensuring the complete interchangeability of all components.

What's more, each unit can be expanded, reduced, repurposed, divided, or merged with another using the same components — effectively adapting to new needs, challenges, and spatial requirements.

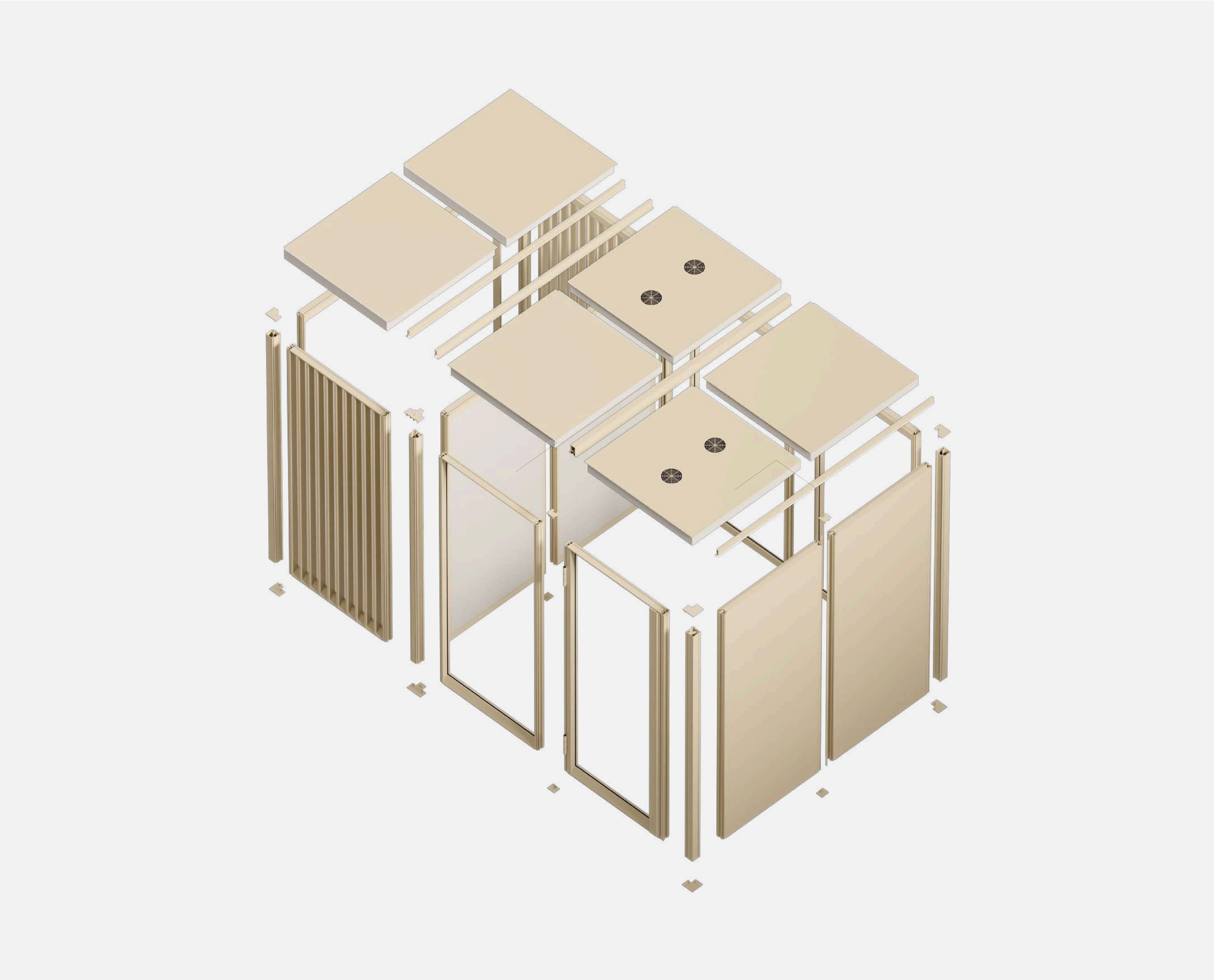

Mute © 2026 All rights reserved

Adaptable Path to Sustainability

As the first truly adaptable room-in-room system, Mute Modular leads a sustainable revolution in creating and maintaining commercial spaces.

Built from prefabricated, interchangeable modules, the system can be reconfigured effortlessly—without tools, renovation waste, or CO_2 emissions. This adaptability enables offices to evolve seamlessly with a team's changing needs while significantly reducing the environmental impact of traditional refurbishments.

Recognized Innovation

Since its premiere, Mute Modular has been widely acclaimed by journalists and industry experts, earning ten prestigious design awards and nominations, including the Best of NeoCon Gold Award and the Mix Award. It was also labeled as one of the 10 most innovative office products in Fast Company's Innovation by Design competition.

Here is the list of all awards and nominations:

Best of Neocon 2023 Gold (Interior Products and Solutions category)
Mixology'23 Award (Loose Furniture)
Metropolis Likes 2023 award
Dezeen Awards 2023 nomination (Workplace design category)
Mixology 23' North nomination (Loose furniture)
HiP Awards 2023 nomination (Partition & Wall Systems)
Fast Company Innovation by Design 2024 Honoree
FIS Innovation 2024 nomination
CDW Awards Nomination 2026 (Acoustics)

Best of NeoCon

Mix Interiors mixology23

METROPOLIS LIKES

shortlisted dezeen awards 2023

CDW AWARDS

Mix Interiors mixology23
NORTH 23'

INTERIOR DESIGN HiP

FAST COMPANY INNOVATION BY DESIGN
HONOREE

FIS
FINISHES & INTERIORS SECTOR

archiproducts AWARDS LONGLISTED

Mute © 2026 All rights reserved

Categories

The Mute Modular system is built around four key spatial categories: functional pods, meeting rooms in varying capacities, multifunctional hubs composed of multiple enclosed areas, and modular partition zones. This framework allows planners and architects to shape flexible, future-ready offices using one coherent and versatile system.

Pods

Rooms

Hubs

Partitions

Mute © 2026 All rights reserved

Pods

Soundproof booths designed for privacy, focus, and acoustic comfort. Perfect for calls, video meetings, or deep work, Pods fit 1–4 people and bring work flexibility into any setting. Their sleek design enhances office flow while creating quiet zones for productivity, concentration, and collaboration without distraction.

Mute © 2026 All rights reserved

Modular | MUTE.

Name	Function	Capacity	Room type	Modular size	Acoustics
Work 1,5x1 p1.v2.C	Work	1 person	Closed	1,5x1	A

Dimensions

165,5 x 115 x 238 / 226 cm
65.16 x 45.28 x 93.7 / 88.97 in.

Description

This Modular Pod, designed for focus and uninterrupted work, comfortably fit up to 1 person. It features Class A acoustics and a modular system funiture for maximum adaptability.

It's part of the world's largest acoustic pod collection, created to offer unparalleled versatility in pod use.

Colors

Construction

5x	solid wall module
1x	right-hand glass door module
1x	ventilation ceiling module
1x	electric ceiling module
1x	power distribution unit
√	control panel
√	integrated linear lamp

System furniture and accessories

1x	desk with electric adjustment W100xL55
1x	shallow shelf
1x	display rail

Sage Green

This visualization contains 3rd party products which are purely examplary and are not sold by Mute.
Acoustics acording to ISO 23351-1. Acoustic class depends on the configuration of walls and ceilings.
Presets like the one specified in this card can be combined into multifunctional hubs.
Elements of Mute Modular system may change. Availability of finishes and equipment varies by region.

Interested in this unit? Ask for an offer →

Mute © 2026 All rights reserved

Modular | MUTE.

Name	Function	Capacity	Room type	Modular size	Acoustics
Work 1,5x1 p1.v4.C	Work	1 person	Closed	1,5x1	A

Dimensions

165,5 x 115 x 238 / 226 cm
65.16 x 45.28 x 93.7 / 88.97 in.

Description

This Modular Pod, designed for focus and uninterrupted work, comfortably fit up to 1 person. It features Class A acoustics and a modular system funiture for maximum adaptability.

It's part of the world's largest acoustic pod collection, created to offer unparalleled versatility in pod use.

Colors

Construction

4x	solid wall module
1x	glass wall module
1x	left-hand glass door module
1x	ventilation ceiling module
1x	electric ceiling module
1x	power distribution unit
1x	Myco track lighting
√	integrated linear lamp
√	control panel

System furniture and accessories

1x	desk with electric adjustment W100xL55
1x	shallow shelf
1x	display rail
1x	magnet (2 pcs)

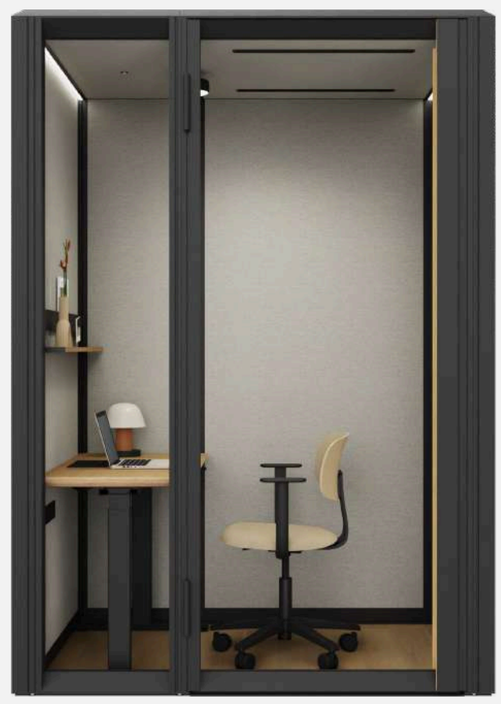

Void Black

This visualization contains 3rd party products which are purely examplary and are not sold by Mute.
Acoustics acording to ISO 23351-1. Acoustic class depends on the configuration of walls and ceilings.
Presets like the one specified in this card can be combined into multifunctional hubs.
Elements of Mute Modular system may change. Availability of finishes and equipment varies by region.

Interested in this unit? Ask for an offer →

Mute © 2026 All rights reserved

Modular | MUTE.

Name	Function	Capacity	Room type	Modular size	Acoustics
Work 1,5x1 p1.v5.C	Work	1 person	Closed	1,5x1	B

Dimensions

165,5 x 115 x 238 / 226 cm
65.16 x 45.28 x 93.7 / 88.97 in.

Description

This Modular Pod, designed for focus and uninterrupted work, comfortably fit up to 1 person. It features Class B* acoustics and a modular system funiture for maximum adaptability.

It's part of the world's largest acoustic pod collection, created to offer unparalleled versatility in pod use.

Colors

Construction

4x	solid wall module
1x	glass wall module
1x	left-hand glass door module
1x	ventilation ceiling module
1x	electric ceiling module
1x	power distribution unit
√	integrated linear lamp
√	control panel

System furniture and accessories

1x	desk 100
1x	TV hanger - two profile

Steel Blue

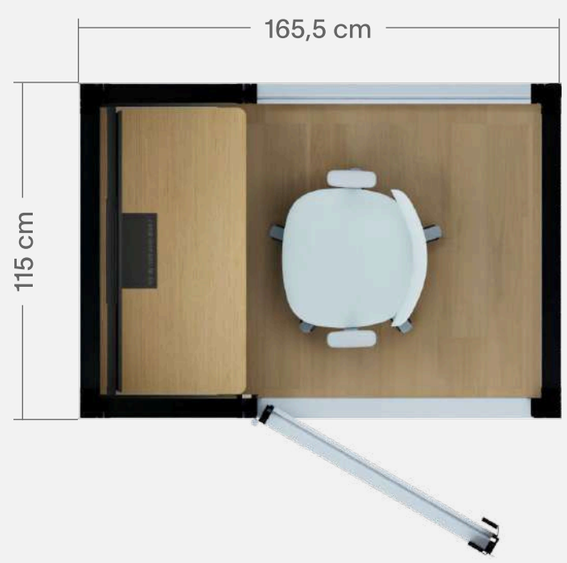

This visualization contains 3rd party products which are purely examplary and are not sold by Mute.
Acoustics acording to ISO 23351-1. Acoustic class depends on the configuration of walls and ceilings.
Presets like the one specified in this card can be combined into multifunctional hubs.
Elements of Mute Modular system may change. Availability of finishes and equipment varies by region.

Interested in this unit? Ask for an offer →

Mute © 2026 All rights reserved

Modular | MUTE.

Name	Function	Capacity	Room type	Modular size	Acoustics
Work 1,5x1 p1.v6.C	Work	1 person	Closed	1,5x1	B

Dimensions

165,5 x 115 x 238 / 226 cm
65.16 x 45.28 x 93.7 / 88.97 in.

Description

This Modular Pod, designed for distraction-free phone conversations, comfortably fit up to 1 person. It features Class B acoustics and a modular system funiture for maximum adaptability.

It's part of the world's largest acoustic pod collection, created to offer unparalleled versatility in pod use.

Colors

Construction

2x	solid wall module
3x	glass wall module
1x	right-hand glass door module
1x	ventilation ceiling module
1x	electric ceiling module
1x	power distribution unit
√	integrated linear lamp
√	control panel

System furniture and accessories

1x	desk 100
1x	display rail
1x	magnet (2 pcs)

Sand Beige

This visualization contains 3rd party products which are purely examplary and are not sold by Mute.
Acoustics acording to ISO 23351-1. Acoustic class depends on the configuration of walls and ceilings.
Presets like the one specified in this card can be combined into multifunctional hubs.
Elements of Mute Modular system may change. Availability of finishes and equipment varies by region.

Interested in this unit? Ask for an offer →

Mute © 2026 All rights reserved

Modular | MUTE.

Name	Function	Capacity	Room type	Modular size	Acoustics
Work 1,5x1,5 p1.v1.C	Work	1 person	Closed	1,5x1,5	B

Dimensions

165,5 x 165,5 x 238 / 226 cm
65.16 x 65.16 x 93.7 / 88.97 in.

Description

This Modular Pod, designed for focus and uninterrupted work, comfortably fits for 1 person. It features Class B acoustics and a modular system funiture for maximum adaptability.

It's part of the world's largest acoustic pod collection, created to offer unparalleled versatility in pod use.

Colors

Construction

4x	solid wall module
3x	glass wall module
1x	right-hand glass door module
2x	ventilation ceiling module
1x	electric ceiling module
1x	solid ceiling module
2x	power distribution unit
2x	Myco track lighting
√	integrated linear lamp
√	control panel

System furniture and accessories

1x	desk with electric adjustment W150xL55
2x	shallow shelf
2x	display rail

Spruce Green

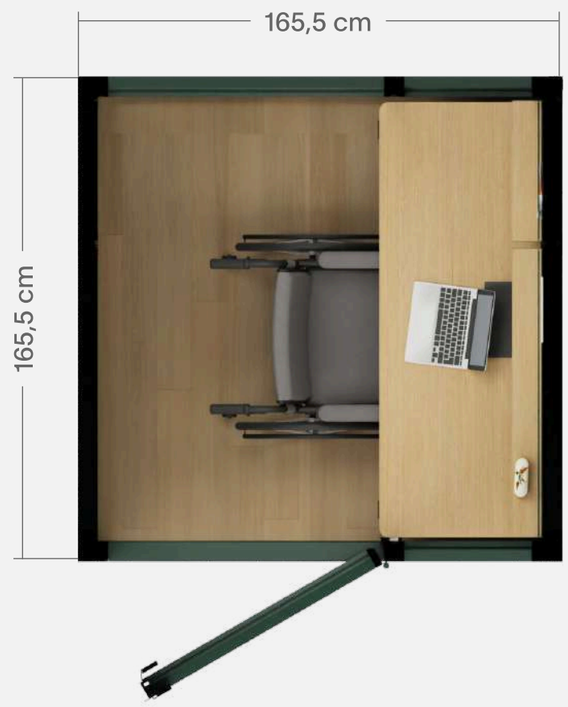

This visualization contains 3rd party products which are purely examplary and are not sold by Mute.
Acoustics acording to ISO 23351-1. Acoustic class depends on the configuration of walls and ceilings.
Presets like the one specified in this card can be combined into multifunctional hubs.
Elements of Mute Modular system may change. Availability of finishes and equipment varies by region.

Interested in this unit? Ask for an offer →

Mute © 2026 All rights reserved

Modular | MUTE.

Name	Function	Capacity	Room type	Modular size	Acoustics
Work 1,5x1,5 p1.v2.C	Work	1 person	Closed	1,5x1,5	A

Dimensions

165,5 x 165,5 x 238 / 226 cm
65.16 x 65.16 x 93.7 / 88.97 in.

Description

This Modular Pod, designed for focus and uninterrupted work, comfortably fit up to 1 person. It features Class A acoustics and a modular system funiture for maximum adaptability.

It's part of the world's largest acoustic pod collection, created to offer unparalleled versatility in pod use.

Colors

Construction

6x	solid wall module
1x	glass wall module
1x	left-hand glass door module
2x	ventilation ceiling module
1x	electric ceiling module
1x	solid ceiling module
1x	power distribution unit
√	integrated linear lamp
√	control panel

System furniture and accessories

1x	desk 150
2x	shallow shelf
2x	display rail
1x	display rail hook (4 pcs)

Graphite Black

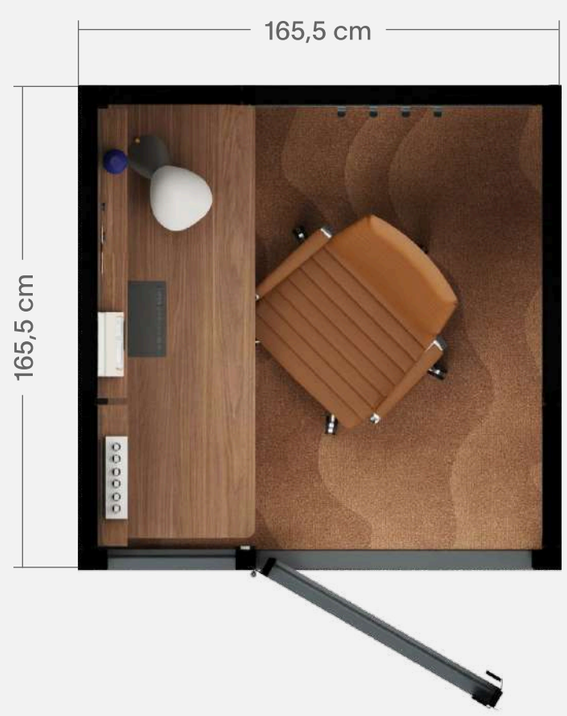

This visualization contains 3rd party products which are purely examplary and are not sold by Mute.
Acoustics acording to ISO 23351-1. Acoustic class depends on the configuration of walls and ceilings.
Presets like the one specified in this card can be combined into multifunctional hubs.
Elements of Mute Modular system may change. Availability of finishes and equipment varies by region.

Interested in this unit? Ask for an offer →

Mute © 2026 All rights reserved

Modular | MUTE.

Name	Function	Capacity	Room type	Modular size	Acoustics
Meet 2x1 p2.v4.C	Meet	4 people	Closed	2x1	A

Dimensions

216 x 115 x 238 / 226 cm
85.04 x 45.28 x 93.7 / 88.97 in.

Description

This Modular Pod, designed for discussions and teamwork, comfortably fits up to 4 people. It features Class A acoustics and a modular system funiture for maximum adaptability.

It's part of the world's largest acoustic pod collection, created to offer unparalleled versatility in pod use.

Colors

Construction

5x	solid wall module
2x	glass wall module
1x	left-hand glass door module
2x	ventilation ceiling module
1x	electric ceiling module
1x	power distribution unit
√	integrated linear lamp
√	control panel

System furniture and accessories

2x sofa with two armrests
L80

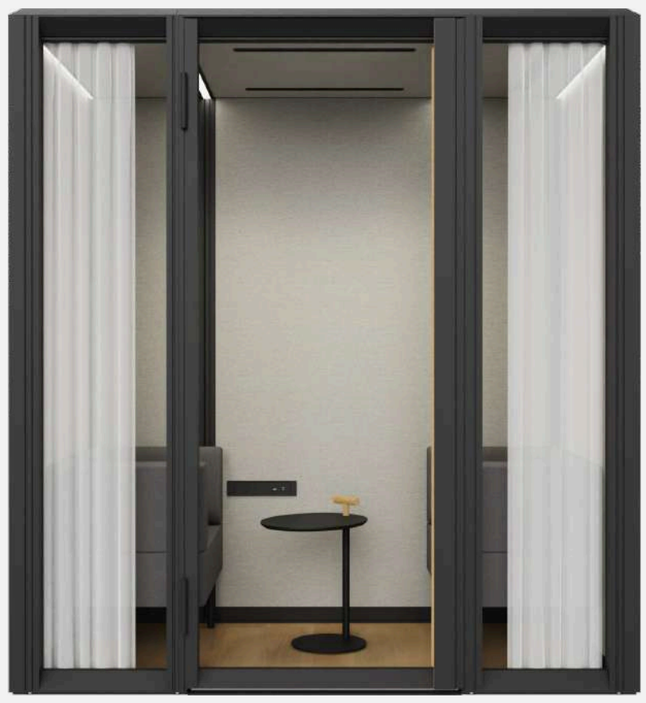

Void Black

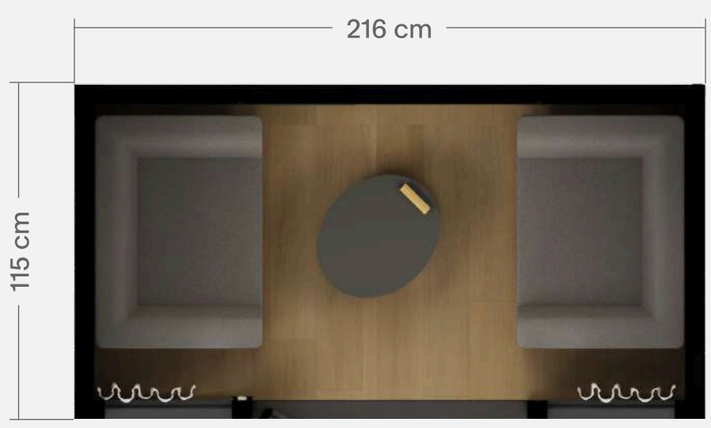

This visualization contains 3rd party products which are purely examplary and are not sold by Mute.
Acoustics acording to ISO 23351-1. Acoustic class depends on the configuration of walls and ceilings.
Presets like the one specified in this card can be combined into multifunctional hubs.
Elements of Mute Modular system may change. Availability of finishes and equipment varies by region.

Interested in this unit? Ask for an offer →

Mute © 2026 All rights reserved

Modular | MUTE.

Name	Function	Capacity	Room type	Modular size	Acoustics
Meet 2x1 p2.v5.C	Meet	2 people	Closed	2x1	A

Dimensions

216 x 115 x 238 / 226 cm
85.04 x 45.28 x 93.7 / 88.97 in.

Description

This Modular Pod, designed for video calls, comfortably fits up to 2 people. It features Class A acoustics and a modular system funiture for maximum adaptability.

It's part of the world's largest acoustic pod collection, created to offer unparalleled versatility in pod use.

Colors

Construction

5x	solid wall module
2x	glass wall module
1x	left-hand glass door module
2x	ventilation ceiling module
1x	electric ceiling module
2x	power distribution unit
2x	Myco track lighting
√	integrated linear lamp
√	control panel

System furniture and accessories

2x	sofa with right armrests L100
1x	table W81xL56
1x	TV hanger - two profile

Rusty Red

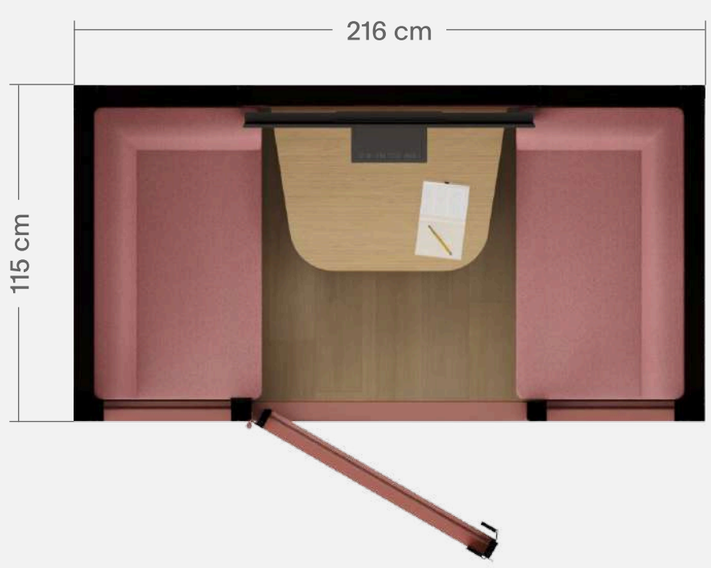

This visualization contains 3rd party products which are purely examplary and are not sold by Mute.
Acoustics acording to ISO 23351-1. Acoustic class depends on the configuration of walls and ceilings.
Presets like the one specified in this card can be combined into multifunctional hubs.
Elements of Mute Modular system may change. Availability of finishes and equipment varies by region.

Interested in this unit? Ask for an offer →

Mute © 2026 All rights reserved

Modular | MUTE.

Name	Function	Capacity	Room type	Modular size	Acoustics
Meet 2x1 p2.v6.C	Meet	2 people	Closed	2x1	B

Dimensions

216 x 115 x 238 / 226 cm
85.04 x 45.28 x 93.7 / 88.97 in.

Description

This Modular Pod, designed for discussions and teamwork, comfortably fits up to 2 people. It features Class B acoustics and a modular system funiture for maximum adaptability.

It's part of the world's largest acoustic pod collection, created to offer unparalleled versatility in pod use.

Colors

Construction

2x	solid wall module
5x	glass wall module
1x	left-hand glass door module
2x	ventilation ceiling module
1x	electric ceiling module
1x	power distribution unit
√	integrated linear lamp
√	control panel

System furniture and accessories

2x	sofa without armrests L80
1x	table W81xL56

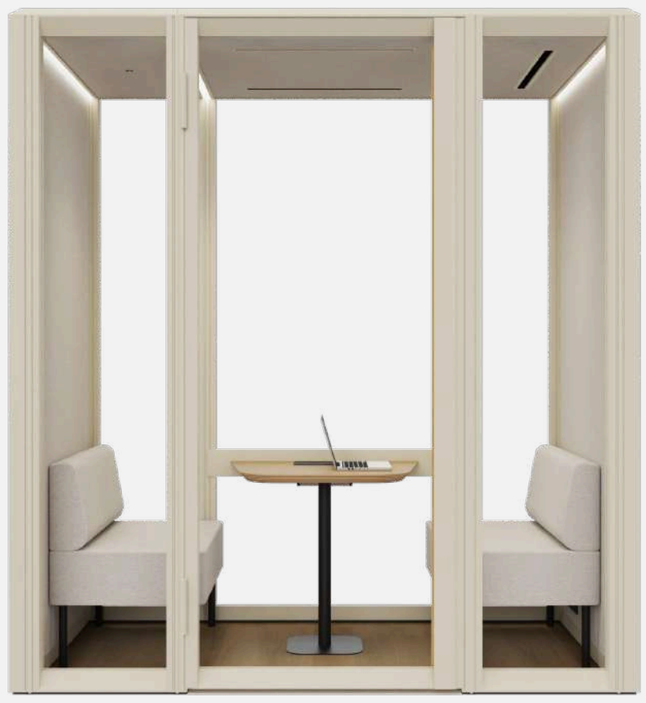

Ash Gray

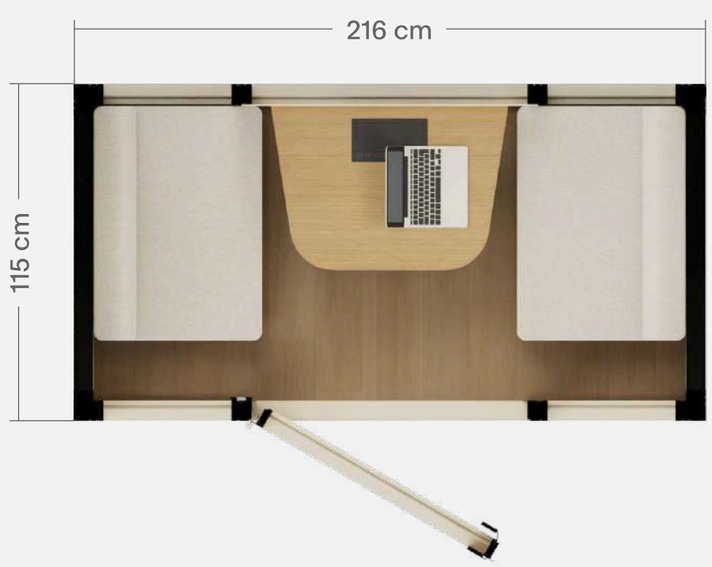

This visualization contains 3rd party products which are purely examplary and are not sold by Mute.
Acoustics acording to ISO 23351-1. Acoustic class depends on the configuration of walls and ceilings.
Presets like the one specified in this card can be combined into multifunctional hubs.
Elements of Mute Modular system may change. Availability of finishes and equipment varies by region.

Interested in this unit? Ask for an offer →

Mute © 2026 All rights reserved

Modular | MUTE.

Name	Function	Capacity	Room type	Modular size	Acoustics
Work 2x1 p1.v2.C	Work	1 person	Closed	2x1	A

Dimensions

252,5 x 115 x 238 / 226 cm
99.41 x 45.28 x 93.7 / 88.97 in.

Description

This Modular Pod, designed for focus and uninterrupted work, comfortably fit up to 1 person. It features Class A acoustics and a modular system funiture for maximum adaptability.

It's part of the world's largest acoustic pod collection, created to offer unparalleled versatility in pod use.

Colors

Construction

4x	solid wall module
1x	glass wall module
1x	left-hand glass door module
1x	ventilation ceiling module
1x	electric ceiling module
1x	power distribution unit
√	integrated linear lamp
√	control panel

System furniture and accessories

2x	desk with electric adjustment W100xL55
1x	shallow shelf
1x	display rail
1x	magnet (2 pcs)

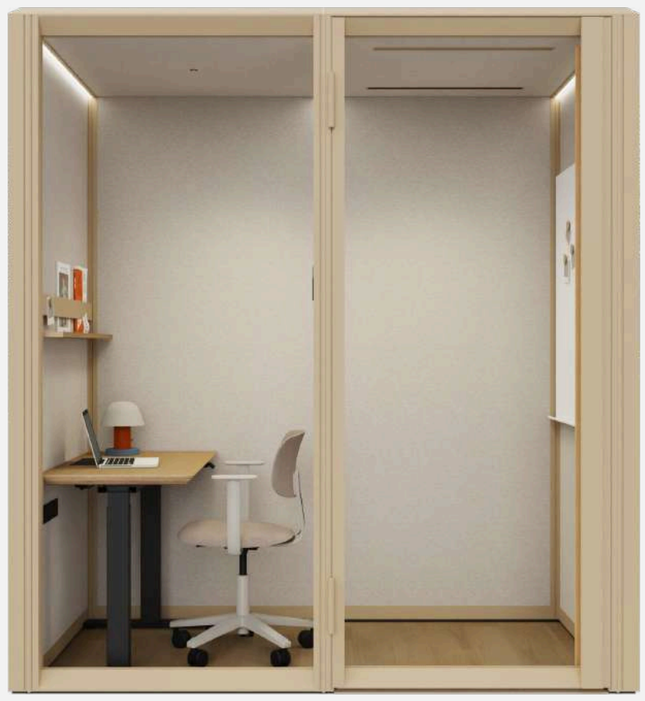

Sand Beige

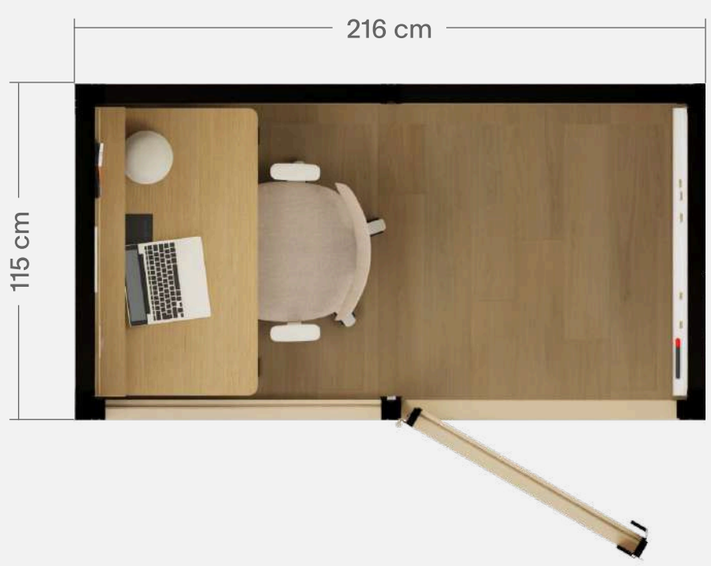

This visualization contains 3rd party products which are purely examplary and are not sold by Mute.
Acoustics acording to ISO 23351-1. Acoustic class depends on the configuration of walls and ceilings.
Presets like the one specified in this card can be combined into multifunctional hubs.
Elements of Mute Modular system may change. Availability of finishes and equipment varies by region.

Interested in this unit? Ask for an offer →

Mute © 2026 All rights reserved

Modular | MUTE.

Name	Function	Capacity	Room type	Modular size	Acoustics
Meet 2x1,5 p3.v1.C	Meet	3 people	Closed	2x1,5	B

Dimensions

216 x 165,5 x 238 / 226 cm
85.04 x 65.16 x 93.7 / 88.97 in.

Description

This Modular Pod, designed for brainstorms and team sessions, comfortably fits up to 3 people. It features Class B acoustics and a modular system funiture for maximum adaptability.

It's part of the world's largest acoustic pod collection, created to offer unparalleled versatility in pod use.

Colors

Construction

4x	solid wall module
3x	glass wall module
1x	left-hand glass door module
3x	ventilation ceiling module
1x	electric ceiling module
1x	power distribution unit
√	integrated linear lamp
√	control panel

System furniture and accessories

1x	sofa without armrests L138
1x	sofa with right armrests L138
1x	whiteboard
2x	shallow shelf
2x	display rail
3x	magnet (2 pcs)

Moon White

This visualization contains 3rd party products which are purely examplary and are not sold by Mute.
Acoustics acording to ISO 23351-1. Acoustic class depends on the configuration of walls and ceilings.
Presets like the one specified in this card can be combined into multifunctional hubs.
Elements of Mute Modular system may change. Availability of finishes and equipment varies by region.

Interested in this unit? Ask for an offer →

Mute © 2026 All rights reserved

Modular | MUTE.

Name	Function	Capacity	Room type	Modular size	Acoustics
Meet 2x1,5 p4.v1.C	Meet	4 people	Closed	2x1,5	B

Dimensions

216 x 165,5 x 238 / 226 cm
85.04 x 65.16 x 93.7 / 88.97 in.

Description

This Modular Pod, designed for teamwork and collaboration, comfortably fits up to 4 people. It features Class B acoustics and a modular system funiture for maximum adaptability.

It's part of the world's largest acoustic pod collection, created to offer unparalleled versatility in pod use.

Colors

Construction

4x	solid wall module
3x	glass wall module
1x	left-hand glass door module
3x	ventilation ceiling module
1x	electric ceiling module
2x	power distribution unit
√	integrated linear lamp
√	control panel

System furniture and accessories

1x	desk with electric adjustment W100xL55
1x	TV hanger - one profile

Ink Blue

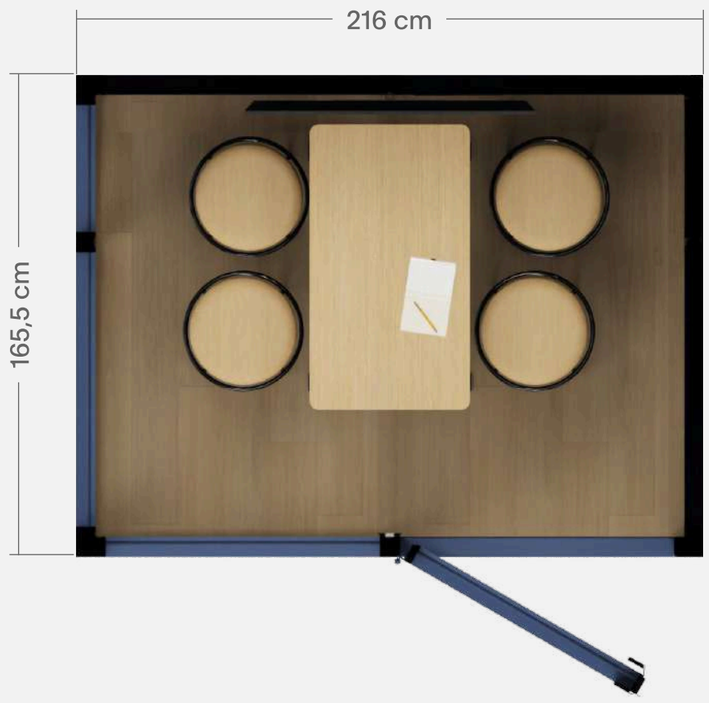

This visualization contains 3rd party products which are purely examplary and are not sold by Mute.
Acoustics acording to ISO 23351-1. Acoustic class depends on the configuration of walls and ceilings.
Presets like the one specified in this card can be combined into multifunctional hubs.
Elements of Mute Modular system may change. Availability of finishes and equipment varies by region.

Interested in this unit? Ask for an offer →

Mute © 2026 All rights reserved

Modular | MUTE.

Name	Function	Capacity	Room type	Modular size	Acoustics
Meet 2x1,5 p4.v2.C	Meet	4 people	Closed	2x1,5	A

Dimensions

216 x 165,5 x 238 / 226 cm
85.04 x 65.16 x 93.7 / 88.97 in.

Description

This Modular Pod, designed for video calls and informal meetings, comfortably fits up to 4 people. It features Class A acoustics and a modular system funiture for maximum adaptability.

It's part of the world's largest acoustic pod collection, created to offer unparalleled versatility in pod use.

Colors

Construction

7x	solid wall module
2x	glass wall module
1x	left-hand glass door module
4x	ventilation ceiling module
1x	electric ceiling module
1x	solid ceiling module
2x	power distribution unit
√	integrated linear lamp
√	control panel

System furniture and accessories

2x	sofa without armrests L138
1x	table W81xL106
1x	TV hanger - two profile

Cream White

This visualization contains 3rd party products which are purely examplary and are not sold by Mute.
Acoustics acording to ISO 23351-1. Acoustic class depends on the configuration of walls and ceilings.
Presets like the one specified in this card can be combined into multifunctional hubs.
Elements of Mute Modular system may change. Availability of finishes and equipment varies by region.

Interested in this unit? Ask for an offer →

Mute © 2026 All rights reserved

Modular | MUTE.

Name	Function	Capacity	Room type	Modular size	Acoustics
Meet 2x1,5 p4.v3.C	Meet	4 people	Closed	2x1,5	B

Dimensions

216 x 165,5 x 238 / 226 cm
85.04 x 65.16 x 93.7 / 88.97 in.

Description

This Modular Pod, designed for discussions and teamwork, comfortably fits up to 4 people. It features Class B acoustics and a modular system funiture for maximum adaptability.

It's part of the world's largest acoustic pod collection, created to offer unparalleled versatility in pod use.

Colors

Construction

5x	solid wall module
4x	glass wall module
1x	left-hand glass door module
4x	ventilation ceiling module
1x	electric ceiling module
1x	solid ceiling module
1x	power distribution unit
2x	Myco track lighting
√	integrated linear lamp
√	control panel

System furniture and accessories

2x	sofa without armrests L138
1x	table W81xL106

Spruce Green

This visualization contains 3rd party products which are purely examplary and are not sold by Mute.
Acoustics acording to ISO 23351-1. Acoustic class depends on the configuration of walls and ceilings.
Presets like the one specified in this card can be combined into multifunctional hubs.
Elements of Mute Modular system may change. Availability of finishes and equipment varies by region.

Interested in this unit? Ask for an offer →

Mute © 2026 All rights reserved

Modular | MUTE.

Name	Function	Capacity	Room type	Modular size	Acoustics
Work 2x1,5 p2.v1.C	Work	2 people	Closed	2x1,5	A

Dimensions

216 x 165,5 x 238 / 226 cm
85.04 x 65.18 x 93.7 / 88.97 in.

Description

This Modular Pod, designed for teamwork and collaboration, comfortably fits up to 2 people. It features Class A acoustics and a modular system funiture for maximum adaptability.

It's part of the world's largest acoustic pod collection, created to offer unparalleled versatility in pod use.

Colors

Construction

6x	solid wall module
1x	glass wall module
1x	left-hand glass door module
2x	ventilation ceiling module
1x	electric ceiling module
1x	solid ceiling module
2x	power distribution unit
√	integrated linear lamp
√	control panel

System furniture and accessories

2x	desk 100
2x	shallow shelf
2x	display rail

Denim Blue

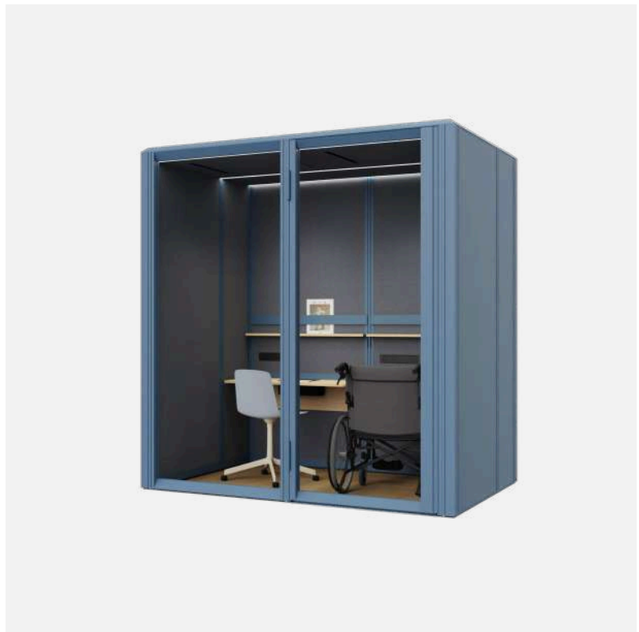

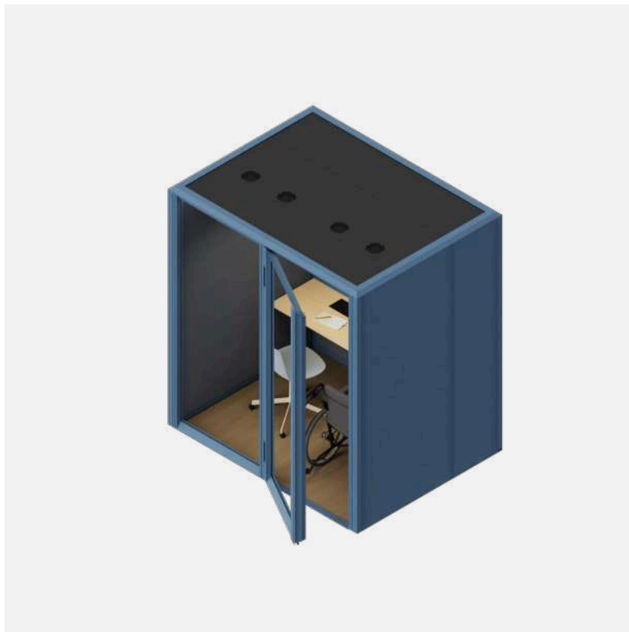

This visualization contains 3rd party products which are purely examplary and are not sold by Mute.
Acoustics acording to ISO 23351-1. Acoustic class depends on the configuration of walls and ceilings.
Presets like the one specified in this card can be combined into multifunctional hubs.
Elements of Mute Modular system may change. Availability of finishes and equipment varies by region.

Interested in this unit? Ask for an offer →

Mute © 2026 All rights reserved

Modular | MUTE.

Name	Function	Capacity	Room type	Modular size	Acoustics
Lounge 2x2 p2.v2.C	Lounge	2 people	Closed	2x2	A

Dimensions

216 x 216 x 238 / 226 cm
85.04 x 85.04 x 93.7 / 88.97 in.

Description

This room for relaxing provides space up to 2 people. It's equipped with dedicated furniture and accessories, finished with third-party fit-outs.

It is a part of Modular Lounge set – cozy areas for less-formal meet-ups and every casual occasion. Perfect for a waiting lounge, chill-out area, or gaming room.

Colors

Construction

6x	solid wall module
1x	glass wall module
1x	right-hand solid door module
2x	ventilation ceiling module
1x	electric ceiling module
1x	solid ceiling module
2x	power distribution unit
2x	Flask track lighting
√	integrated linear lamp
√	control panel

System furniture and accessories

2x	TV hanger - one profile
2x	deep shelf
2x	display rail

Moon White

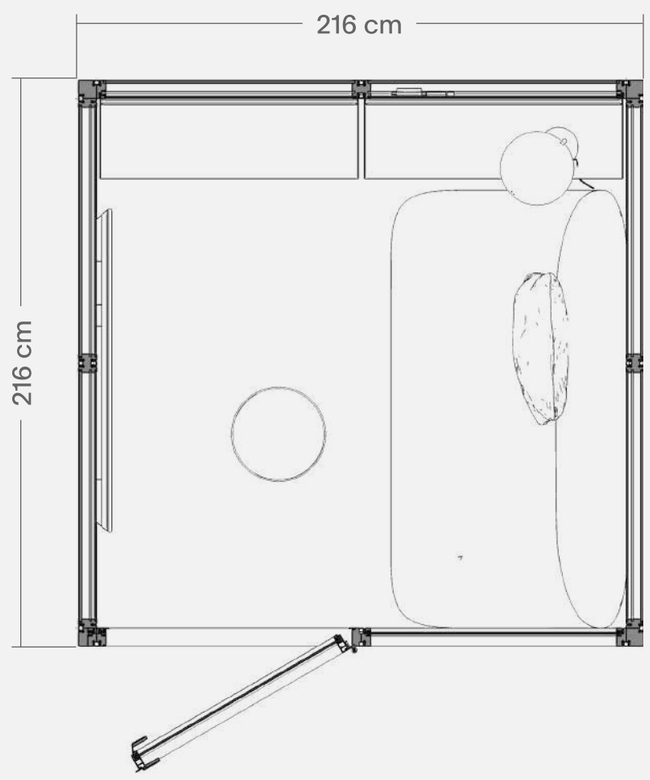

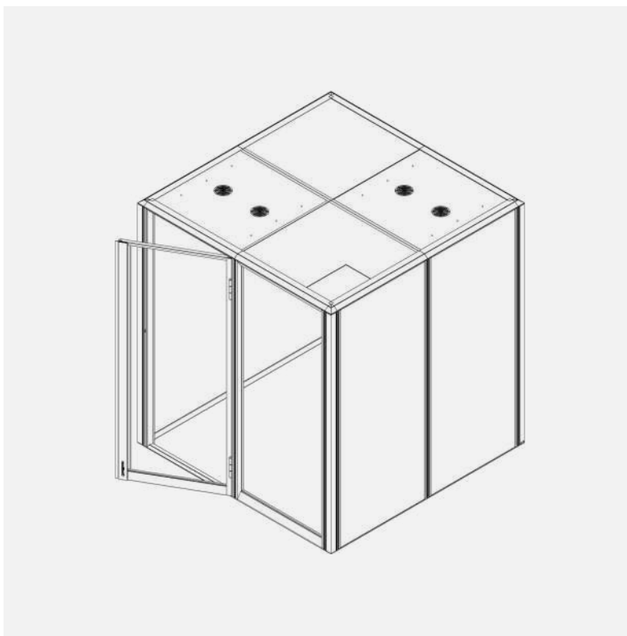

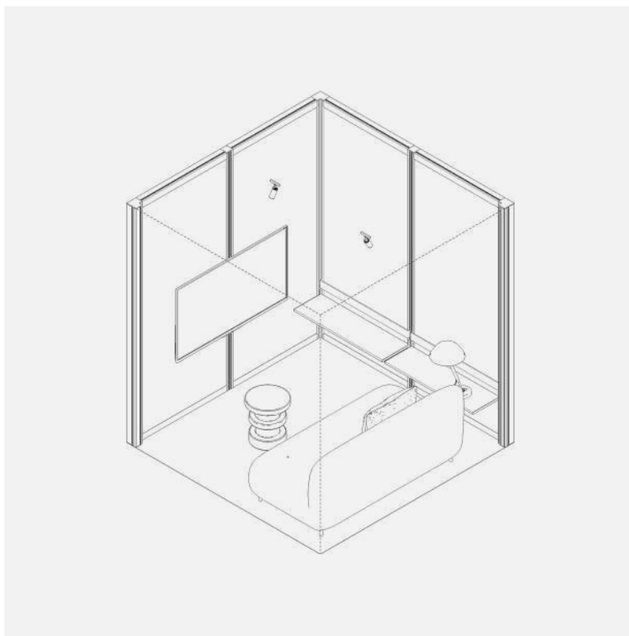

This visualization contains 3rd party products which are purely examplary and are not sold by Mute.
Acoustics acording to ISO 23351-1. Acoustic class depends on the configuration of walls and ceilings.
Presets like the one specified in this card can be combined into multifunctional hubs.
Elements of Mute Modular system may change. Availability of finishes and equipment varies by region.

Interested in this unit? Ask for an offer →

Mute © 2026 All rights reserved

Modular | MUTE.

Name	Function	Capacity	Room type	Modular size	Acoustics
Meet 2x2 p3.v1.C	Meet	3 people	Closed	2x2	B

Dimensions

216 x 216 x 238 / 226 cm
85.04 x 85.04 x 93.7 / 88.97 in.

Description

This Modular Pod, designed for video calls and informal meetings, comfortably fits up to 3 people. It features Class B acoustics and a modular system funiture for maximum adaptability.

It's part of the world's largest acoustic pod collection, created to offer unparalleled versatility in pod use.

Colors

Construction

6x	solid wall module
3x	glass wall module
1x	left-hand glass door module
4x	ventilation ceiling module
1x	electric ceiling module
1x	solid ceiling module
2x	power distribution unit
√	integrated linear lamp
√	control panel

System furniture and accessories

1x	sofa with right armrests L80
1x	sofa with left armrests L80
1x	table W81xL56
1x	TV hanger - two profile
1x	whiteboard
3x	magnets (2 pcs)

Appricot Red

This visualization contains 3rd party products which are purely examplary and are not sold by Mute.
Acoustics acording to ISO 23351-1. Acoustic class depends on the configuration of walls and ceilings.
Presets like the one specified in this card can be combined into multifunctional hubs.
Elements of Mute Modular system may change. Availability of finishes and equipment varies by region.

Interested in this unit? Ask for an offer →

Mute © 2026 All rights reserved

Modular | MUTE.

Name	Function	Capacity	Room type	Modular size	Acoustics
Meet 2x2 p4.v2.C	Meet	4 people	Closed	2x2	B

Dimensions

216 x 216 x 238 / 226 cm
85.04 x 85.04 x 93.7 / 88.97 in.

Description

This Modular Pod, designed for spontaneous conversations and casual interactions, comfortably fits up to 4 people. It features Class B acoustics and a modular system funiture for maximum adaptability.

It's part of the world's largest acoustic pod collection, created to offer unparalleled versatility in pod use.

Colors

Construction

4x	solid wall module
3x	glass wall module
1x	right-hand glass door module
3x	ventilation ceiling module
1x	electric ceiling module
2x	power distribution unit
2x	Myco track lighting
√	integrated linear lamp
√	control panel

System furniture and accessories

1x	sofa with left armrests L100
1x	sofa with right armrests L100
1x	TV hanger - one profile

Sage Green

This visualization contains 3rd party products which are purely examplary and are not sold by Mute.
Acoustics acording to ISO 23351-1. Acoustic class depends on the configuration of walls and ceilings.
Presets like the one specified in this card can be combined into multifunctional hubs.
Elements of Mute Modular system may change. Availability of finishes and equipment varies by region.

Interested in this unit? Ask for an offer →

Mute © 2026 All rights reserved

Modular | MUTE.

Name	Function	Capacity	Room type	Modular size	Acoustics
Meet 2x2 p4.v4.C	Meet	4 people	Closed	2x2	B

Dimensions

216 x 216 x 238 / 226 cm
85.04 x 85.04 x 93.7 / 88.97 in.

Description

This Modular Pod, designed for brainstorms and team sessions, comfortably fits up to 4 people. It features Class B acoustics and a modular system funiture for maximum adaptability.

It's part of the world's largest acoustic pod collection, created to offer unparalleled versatility in pod use.

Colors

Construction

4x	solid wall module
3x	glass wall module
1x	left-hand solid door module
3x	ventilation ceiling module
1x	electric ceiling module
1x	power distribution unit
√	integrated linear lamp
√	control panel

System furniture and accessories

1x	sofa without armrests L138
1x	sofa with left armrests L100
1x	sofa with right armrests L100
2x	whiteboard
1x	shallow shelf
5x	magnets (2 pcs)

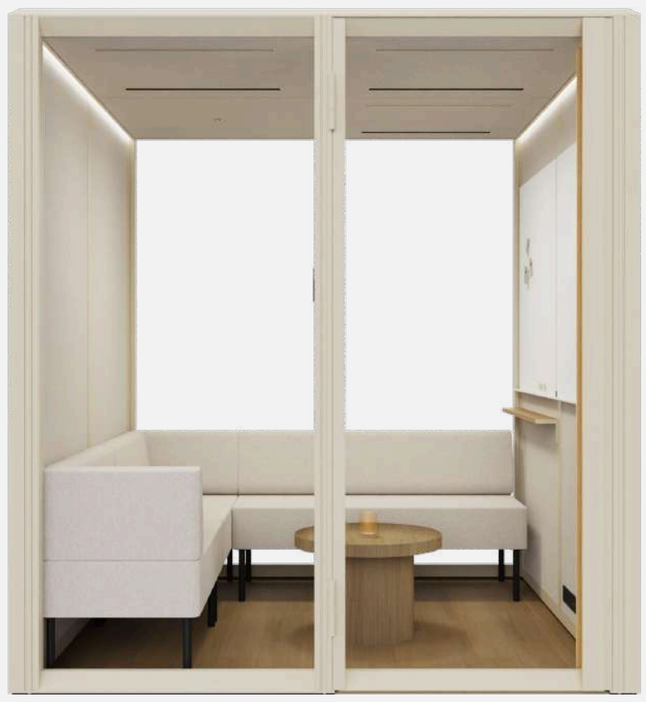

Ash Gray

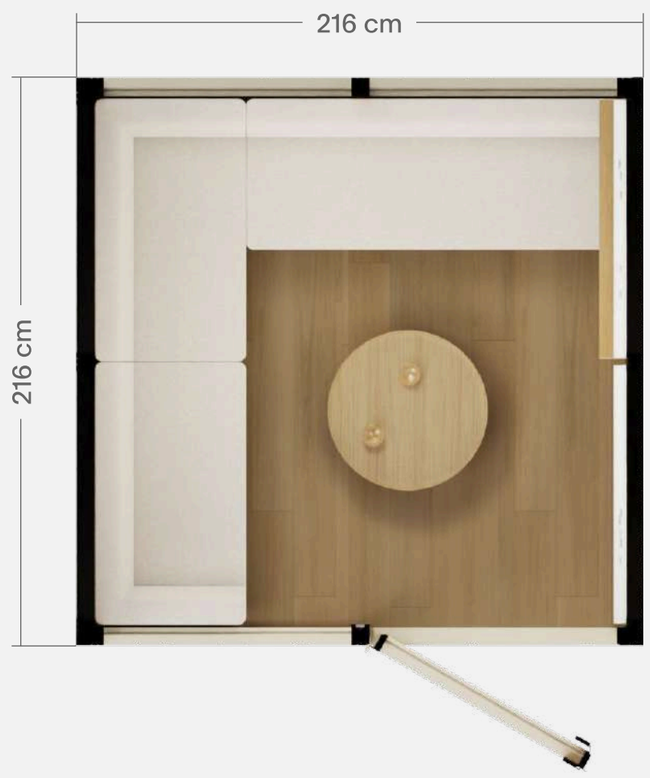

This visualization contains 3rd party products which are purely examplary and are not sold by Mute.
Acoustics acording to ISO 23351-1. Acoustic class depends on the configuration of walls and ceilings.
Presets like the one specified in this card can be combined into multifunctional hubs.
Elements of Mute Modular system may change. Availability of finishes and equipment varies by region.

Interested in this unit? Ask for an offer →

Mute © 2026 All rights reserved

Modular | MUTE.

Name	Function	Capacity	Room type	Modular size	Acoustics
Meet 2x2 p4.v5.C	Meet	4 people	Closed	2x2	B

Dimensions

216 x 216 x 238 / 226 cm
85.04 x 85.04 x 93.7 / 88.97 in.

Description

This Modular Pod, designed for video calls and informal meetings, comfortably fits up to 4 people. It features Class B acoustics and a modular system funiture for maximum adaptability.

It's part of the world's largest acoustic pod collection, created to offer unparalleled versatility in pod use.

Colors

Construction

3x	solid wall module
6x	glass wall module
1x	left-hand solid door module
4x	ventilation ceiling module
1x	electric ceiling module
1x	solid ceiling module
2x	power distribution unit
4x	Myco track lighting
√	integrated linear lamp
√	control panel

System furniture and accessories

2x	sofa without armrests L80
2x	sofa without armrests L100
1x	table W81xL157
1x	TV hanger - two profile

Sand Beige

This visualization contains 3rd party products which are purely examplary and are not sold by Mute.
Acoustics acording to ISO 23351-1. Acoustic class depends on the configuration of walls and ceilings.
Presets like the one specified in this card can be combined into multifunctional hubs.
Elements of Mute Modular system may change. Availability of finishes and equipment varies by region.

Interested in this unit? Ask for an offer →

Mute © 2026 All rights reserved

Modular | MUTE.

Name	Function	Capacity	Room type	Modular size	Acoustics
Meet 2x2 p4.v6.C	Meet	4 people	Closed	2x2	A

Dimensions

216 x 216 x 238 / 226 cm
85.04 x 85.04 x 93.7 / 88.97 in.

Description

This Modular Pod, designed for video calls and informal meetings, comfortably fits up to 4 people. It features Class A acoustics and a modular system funiture for maximum adaptability.

It's part of the world's largest acoustic pod collection, created to offer unparalleled versatility in pod use.

Colors

Construction

7x	solid wall module
2x	glass wall module
1x	left-hand solid door module
4x	ventilation ceiling module
1x	electric ceiling module
1x	solid ceiling module
2x	power distribution unit
√	integrated linear lamp
√	control panel

System furniture and accessories

1x	desk with electric adjustment W150xL55
1x	TV hanger - two profile
1x	display rail
1x	display rail hook (4 pcs)

Straw Green

This visualization contains 3rd party products which are purely examplary and are not sold by Mute.
Acoustics acording to ISO 23351-1. Acoustic class depends on the configuration of walls and ceilings.
Presets like the one specified in this card can be combined into multifunctional hubs.
Elements of Mute Modular system may change. Availability of finishes and equipment varies by region.

Interested in this unit? Ask for an offer →

Mute © 2026 All rights reserved

Modular | MUTE.

Name	Function	Capacity	Room type	Modular size	Acoustics
Work 2x2 p2.v1.C	Work	2 people	Closed	2x2	B

Dimensions

216 x 216 x 238 / 226 cm
85.04 x 85.04 x 93.7 / 88.97 in.

Description

This room for collaborative work provides space and calm for two people. It's equipped with dedicated furniture and accessories, finished with third-party fit-outs.

It is a part of Modular Work set – areas designed purposefully to offer comfort and privacy for the individual, focused work, or small collaborative sessions.

Colors

Construction

4x	solid wall module
3x	glass wall module
1x	left-hand solid door module
2x	ventilation ceiling module
1x	electric ceiling module
1x	solid ceiling module
2x	power distribution unit
2x	Flask track lighting
√	integrated linear lamp
√	control panel

System furniture and accessories

2x	desk 100
2x	whiteboard
2x	display rail
4x	magnet (2 pcs)
2x	wall hook
2x	phone holder
√	curtain rail
√	curtain

Moon White

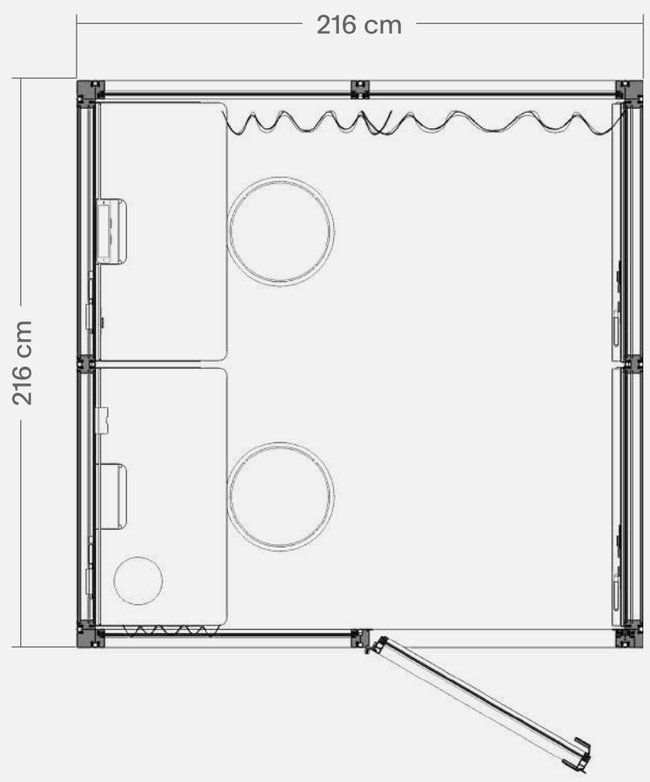

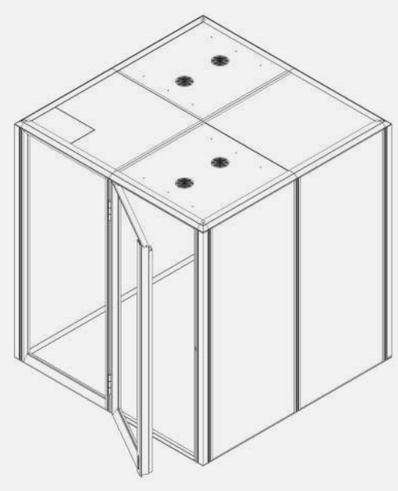

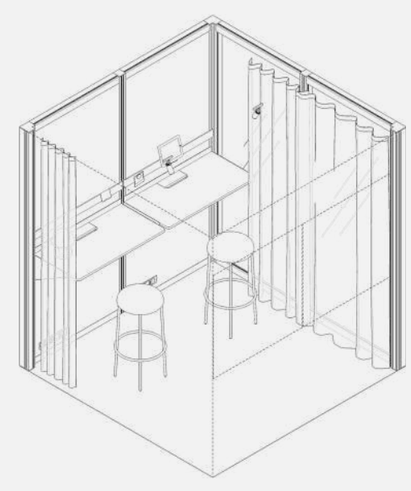

This visualization contains 3rd party products which are purely examplary and are not sold by Mute.
Acoustics acording to ISO 23351-1. Acoustic class depends on the configuration of walls and ceilings.
Presets like the one specified in this card can be combined into multifunctional hubs.
Elements of Mute Modular system may change. Availability of finishes and equipment varies by region.

Interested in this unit? Ask for an offer →

Mute © 2026 All rights reserved

Modular | MUTE.

Name	Function	Capacity	Room type	Modular size	Acoustics
Meet 2x2,5 p4.v1.C	Meet	4 people	Closed	2x2,5	B

Dimensions

216 x 266,5 x 238 / 226 cm
85.04 x 104.92 x 93.7 / 88.97 in.

Description

This Modular Pod, designed for spontaneous conversations and casual interactions, comfortably fits up to 4 people. It features Class B acoustics and a modular system funiture for maximum adaptability.

It's part of the world's largest acoustic pod collection, created to offer unparalleled versatility in pod use.

Colors

Construction

6x	solid wall module
3x	glass wall module
1x	right-hand solid door module
4x	ventilation ceiling module
1x	electric ceiling module
1x	solid ceiling module
2x	power distribution unit
√	integrated linear lamp
√	control panel

System furniture and accessories

1x	sofa with left armrests L100
1x	sofa with right armrests L100
1x	TV hanger - two profile

Stone Green

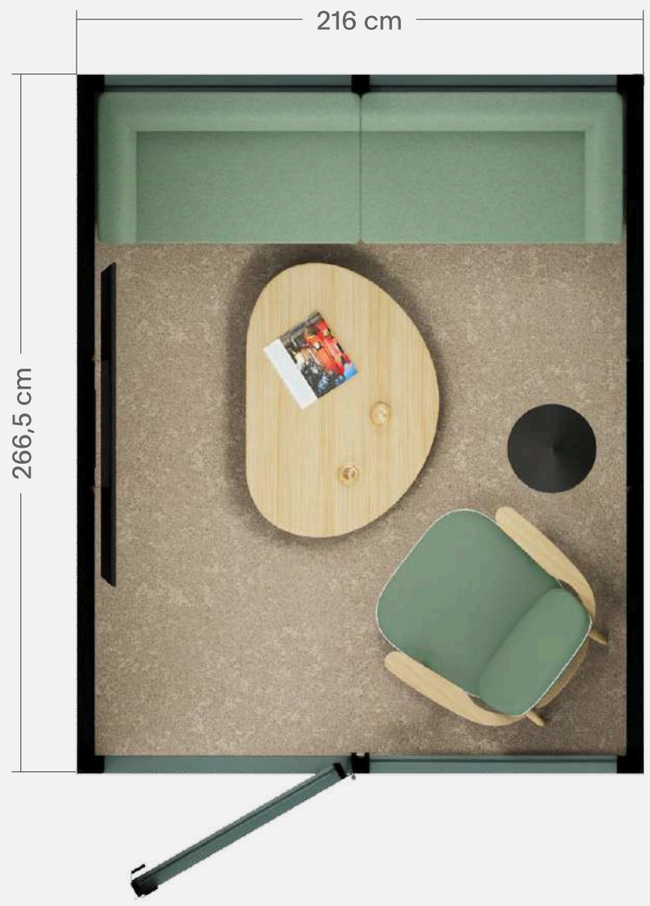

This visualization contains 3rd party products which are purely examplary and are not sold by Mute.
Acoustics acording to ISO 23351-1. Acoustic class depends on the configuration of walls and ceilings.
Presets like the one specified in this card can be combined into multifunctional hubs.
Elements of Mute Modular system may change. Availability of finishes and equipment varies by region.

Interested in this unit? Ask for an offer →

Mute © 2026 All rights reserved

Modular | MUTE.

Name	Function	Capacity	Room type	Modular size	Acoustics
Meet 2x2,5 p4.v2.C	Meet	4 people	Closed	2x2,5	B

Dimensions

216 x 266,5 x 238 / 226 cm
85.04 x 104.92 x 93.7 / 88.97 in.

Description

This Modular Pod, designed for brainstorms and team sessions, comfortably fits up to 4 people. It features Class B acoustics and a modular system funiture for maximum adaptability.

It's part of the world's largest acoustic pod collection, created to offer unparalleled versatility in pod use.

Colors

Construction

5x	solid wall module
6x	glass wall module
1x	left-hand solid door module
4x	ventilation ceiling module
1x	electric ceiling module
4x	solid ceiling module
2x	power distribution unit
4x	Myco track lighting
√	integrated linear lamp
√	control panel

System furniture and accessories

1x	sofa with left armrests L100
1x	sofa with right armrests L100
1x	whiteboard
2x	magnet (2 pcs)

Cardamon Beige

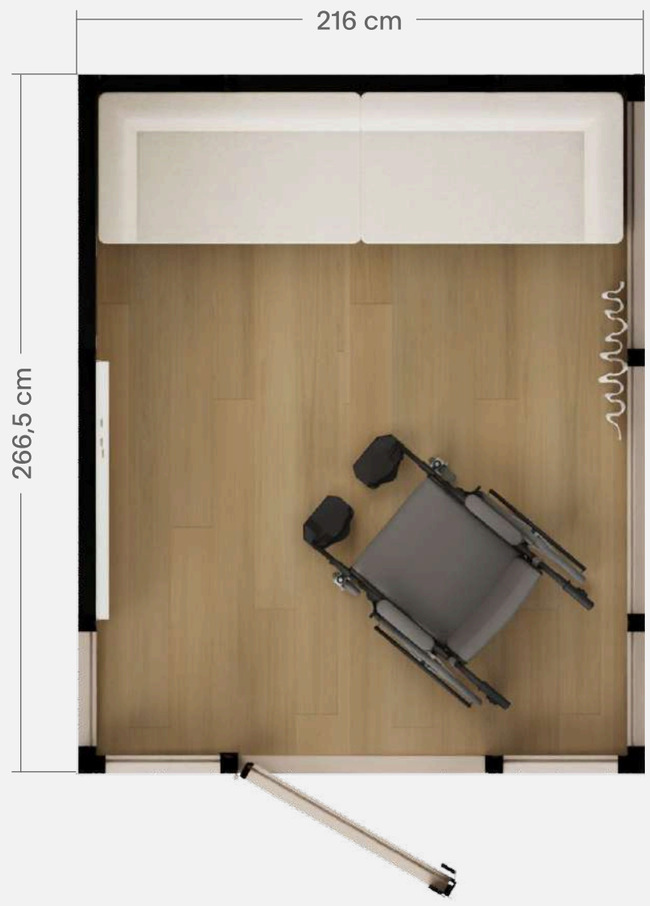

This visualization contains 3rd party products which are purely examplary and are not sold by Mute.
Acoustics acording to ISO 23351-1. Acoustic class depends on the configuration of walls and ceilings.
Presets like the one specified in this card can be combined into multifunctional hubs.
Elements of Mute Modular system may change. Availability of finishes and equipment varies by region.

Interested in this unit? Ask for an offer →

Mute © 2026 All rights reserved

Modular | MUTE.

Name	Function	Capacity	Room type	Modular size	Acoustics
Meet 2x2,5 p5.v1.C	Meet	5 people	Closed	2x2,5	A

Dimensions

216 x 266,5 x 238 / 226 cm
85.04 x 104.92 x 93.7 / 88.97 in.

Description

This Modular Pod, designed for video calls and informal meetings, comfortably fits up to 5 people. It features Class A acoustics and a modular system funiture for maximum adaptability.

It's part of the world's largest acoustic pod collection, created to offer unparalleled versatility in pod use.

Colors

Construction

8x	solid wall module
1x	glass wall module
1x	left-hand solid door module
4x	ventilation ceiling module
1x	electric ceiling module
1x	solid ceiling module
2x	power distribution unit
4x	Myco track lighting
√	integrated linear lamp
√	control panel

System furniture and accessories

1x	table W101xL130
1x	TV hanger - two profile
2x	whiteboard
5x	magnet (2 pcs)

Soil Gray

This visualization contains 3rd party products which are purely examplary and are not sold by Mute.
Acoustics acording to ISO 23351-1. Acoustic class depends on the configuration of walls and ceilings.
Presets like the one specified in this card can be combined into multifunctional hubs.
Elements of Mute Modular system may change. Availability of finishes and equipment varies by region.

Interested in this unit? Ask for an offer →

Mute © 2026 All rights reserved

Modular | MUTE.

Name	Function	Capacity	Room type	Modular size	Acoustics
Meet 2x2,5 p8.v1.C	Meet	8 people	Closed	2x2,5	B

Dimensions

216 x 266,5 x 238 / 226 cm
85.04 x 104.92 x 93.7 / 88.97 in.

Description

This Modular Pod, designed for video calls and informal meetings, comfortably fits up to 8 people. It features Class B acoustics and a modular system funiture for maximum adaptability.

It's part of the world's largest acoustic pod collection, created to offer unparalleled versatility in pod use.

Colors

Construction

7x	solid wall module
4x	glass wall module
1x	left-hand solid door module
6x	ventilation ceiling module
1x	electric ceiling module
2x	solid ceiling module
2x	power distribution unit
√	integrated linear lamp
√	control panel

System furniture and accessories

4x	sofa without armrests L100
1x	table W81xL157
1x	TV hanger - two profile

Coal Brown

This visualization contains 3rd party products which are purely examplary and are not sold by Mute.
Acoustics acording to ISO 23351-1. Acoustic class depends on the configuration of walls and ceilings.
Presets like the one specified in this card can be combined into multifunctional hubs.
Elements of Mute Modular system may change. Availability of finishes and equipment varies by region.

Interested in this unit? Ask for an offer →

Mute © 2026 All rights reserved

Modular | MUTE.

Name	Function	Capacity	Room type	Modular size	Acoustics
Meet 2,5x2 p2.v1.C	Meet	2 people	Closed	2,5x2	A

Dimensions

266,5 x 216 x 238 / 226 cm
104.92 x 85.04 x 93.7 / 88.97 in.

Description

This Modular Pod, designed for video calls and informal meetings, comfortably fits up to 2 people. It features Class A acoustics and a modular system funiture for maximum adaptability.

It's part of the world's largest acoustic pod collection, created to offer unparalleled versatility in pod use.

Colors

Construction

7x	solid wall module
2x	glass wall module
1x	left-hand solid door module
4x	ventilation ceiling module
1x	electric ceiling module
1x	solid ceiling module
2x	power distribution unit
√	integrated linear lamp
√	control panel

System furniture and accessories

1x	table W81xL157
1x	TV hanger - two profile
2x	shallow shelf
2x	display rail
1x	display rail hook (4 pcs)
1x	magnet (2 pcs)

Pebble Gray

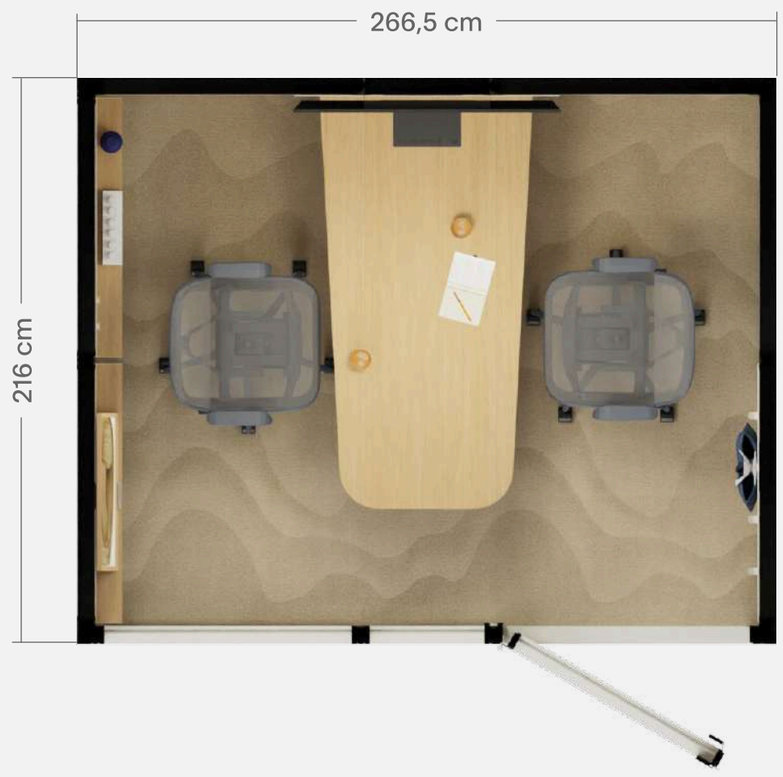

This visualization contains 3rd party products which are purely examplary and are not sold by Mute.
Acoustics acording to ISO 23351-1. Acoustic class depends on the configuration of walls and ceilings.
Presets like the one specified in this card can be combined into multifunctional hubs.
Elements of Mute Modular system may change. Availability of finishes and equipment varies by region.

Interested in this unit? Ask for an offer →

Mute © 2026 All rights reserved

Modular | MUTE.

Name	Function	Capacity	Room type	Modular size	Acoustics
Meet 2,5x2,5 p5.v1.C	Meet	5 people	Closed	2,5x2,5	B

Dimensions

266,5 x 266,5 x 238 / 226 cm
104.92 x 104.92 x 93.7 / 88.97 in.

Description

This Modular Pod, designed for video calls and informal meetings, comfortably fits up to 5 people. It features Class B acoustics and a modular system funiture for maximum adaptability.

It's part of the world's largest acoustic pod collection, created to offer unparalleled versatility in pod use.

Colors

Construction

6x	solid wall module
5x	glass wall module
1x	left-hand solid door module
4x	ventilation ceiling module
1x	electric ceiling module
4x	solid ceiling module
3x	power distribution unit
√	integrated linear lamp
√	control panel

System furniture and accessories

1x	table W101xL130
1x	TV hanger - two profile
1x	whiteboard
5x	magnet (2 pcs)

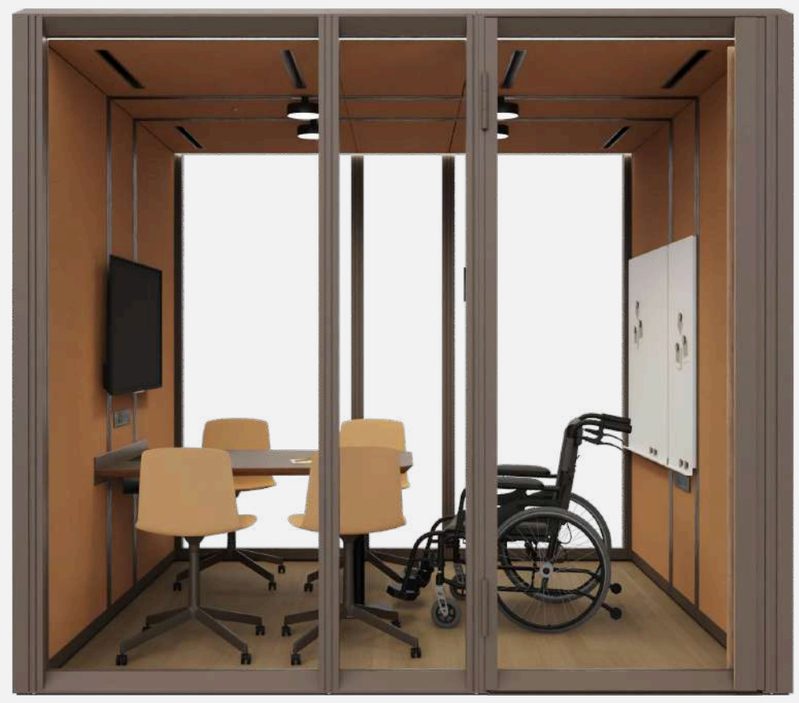

Truffle Brown

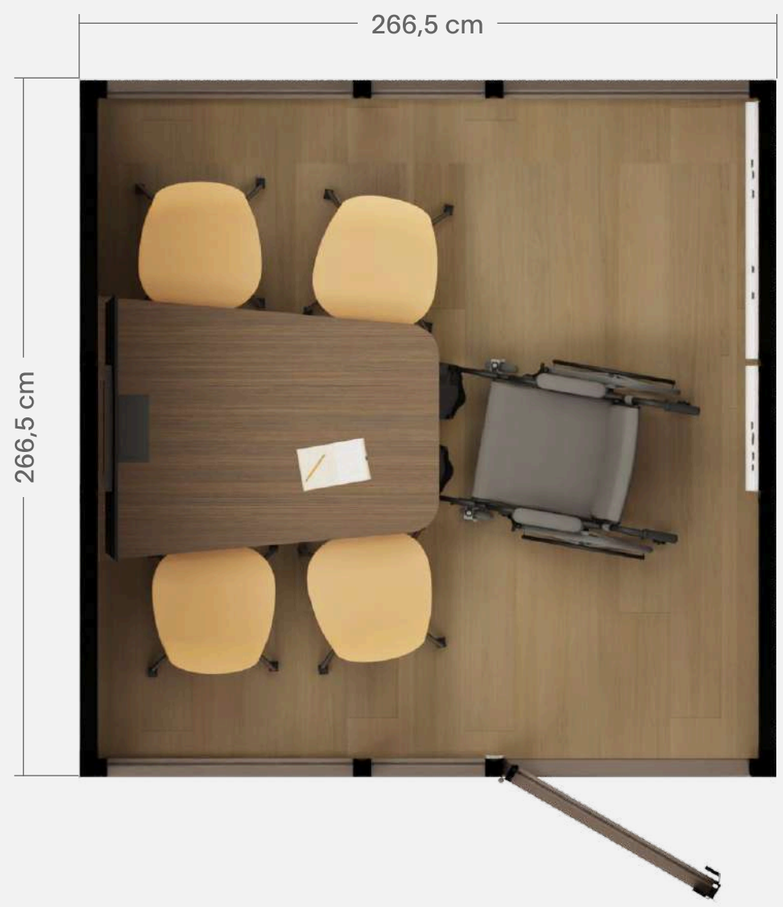

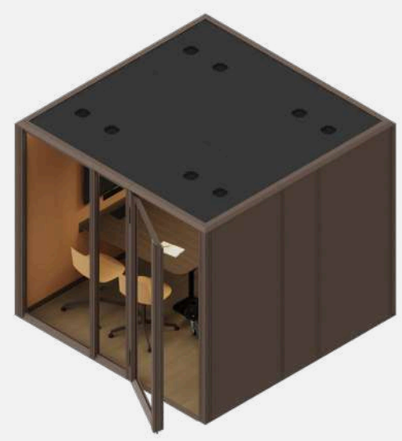

This visualization contains 3rd party products which are purely examplary and are not sold by Mute.
Acoustics acording to ISO 23351-1. Acoustic class depends on the configuration of walls and ceilings.
Presets like the one specified in this card can be combined into multifunctional hubs.
Elements of Mute Modular system may change. Availability of finishes and equipment varies by region.

Interested in this unit? Ask for an offer →

Mute © 2026 All rights reserved

Modular | MUTE.

Name	Function	Capacity	Room type	Modular size	Acoustics
Meet 2,5x2,5 p6.v1.C	Meet	6 people	Closed	2,5x2,5	A

Dimensions

266,5 x 266,5 x 238 / 226 cm
104.92 x 104.92 x 93.7 / 88.97 in.

Description

This Modular Pod, designed for teamwork and collaboration, comfortably fits up to 6 people. It features Class A acoustics and a modular system funiture for maximum adaptability.

It's part of the world's largest acoustic pod collection, created to offer unparalleled versatility in pod use.

Colors

Construction

9x	solid wall module
2x	glass wall module
1x	left-hand solid door module
4x	ventilation ceiling module
1x	electric ceiling module
4x	solid ceiling module
2x	power distribution unit
4x	Myco track lighting
√	integrated linear lamp
√	control panel

System furniture and accessories

1x	table W81xL157
1x	TV hanger - two profile
2x	display rail
1x	display rail hook (4 pcs)

Denim Blue

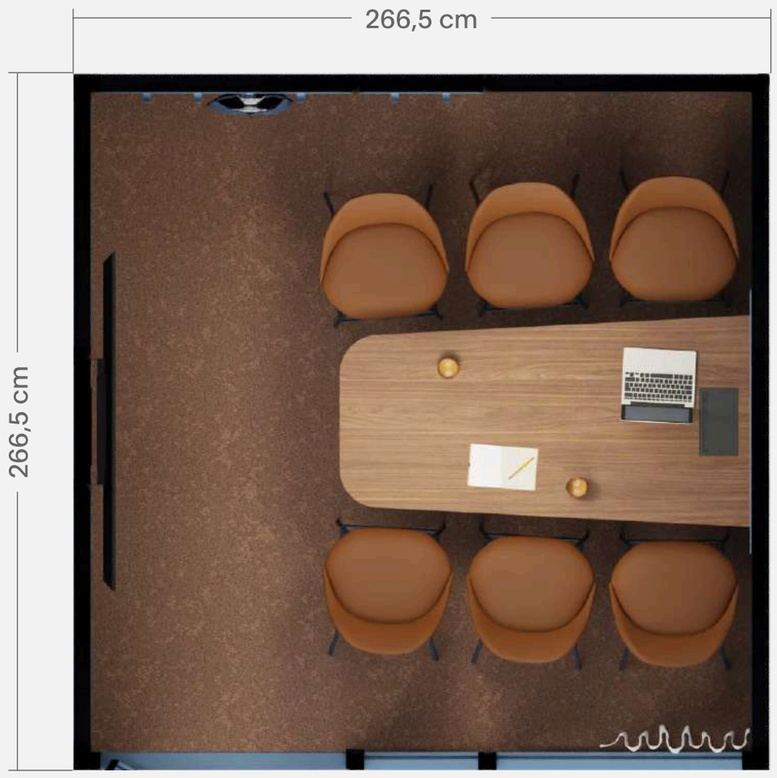

This visualization contains 3rd party products which are purely examplary and are not sold by Mute.
Acoustics acording to ISO 23351-1. Acoustic class depends on the configuration of walls and ceilings.
Presets like the one specified in this card can be combined into multifunctional hubs.
Elements of Mute Modular system may change. Availability of finishes and equipment varies by region.

Interested in this unit? Ask for an offer →

Mute © 2026 All rights reserved

Modular | MUTE.

Name	Function	Capacity	Room type	Modular size	Acoustics
Meet 3x1 p2.v1.C	Meet	2 people	Closed	3x1	B

Dimensions

317 x 115 x 238 / 226 cm
124.8 x 45.28 x 93.7 / 88.97 in.

Description

This Modular Pod, designed for discussions and teamwork, comfortably fits up to 2 people. It features Class B acoustics and a modular system funiture for maximum adaptability.

It's part of the world's largest acoustic pod collection, created to offer unparalleled versatility in pod use.

Colors

Construction

3x	solid wall module
4x	glass wall module
1x	left-hand solid door module
2x	ventilation ceiling module
1x	electric ceiling module
1x	power distribution unit
√	integrated linear lamp
√	control panel

System furniture and accessories

1x	shallow shelf
1x	display rail
1x	magnet (2 pcs)

Reed Green

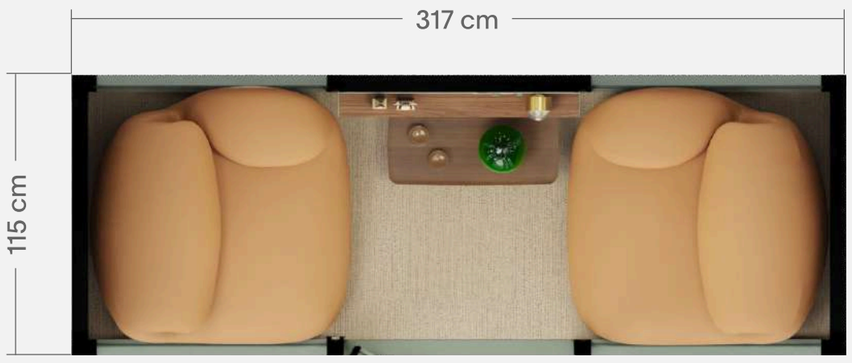

This visualization contains 3rd party products which are purely examplary and are not sold by Mute.
Acoustics acording to ISO 23351-1. Acoustic class depends on the configuration of walls and ceilings.
Presets like the one specified in this card can be combined into multifunctional hubs.
Elements of Mute Modular system may change. Availability of finishes and equipment varies by region.

Interested in this unit? Ask for an offer →

Mute © 2026 All rights reserved

Rooms

Spacious, well-equipped meeting spaces for up to 10 people. Rooms are designed to host brainstorming sessions, client presentations, or hybrid calls with clarity and comfort. With excellent acoustics and a clean aesthetic, they foster creativity, focus, and seamless teamwork in modern office environments.

Mute © 2026 All rights reserved

Modular | MUTE.

Name	Function	Capacity	Room type	Modular size	Acoustics
Meet 2x3 p5.v1.C	Meet	5 people	Closed	2x3	B

Dimensions

216 x 317 x 238 / 226 cm
85.04 x 124.8 x 93.7 / 88.97 in.

Description

This Modular Pod, designed for video calls and informal meetings, comfortably fits up to 5 people. It features Class B acoustics and a modular system funiture for maximum adaptability.

It's part of the world's largest acoustic pod collection, created to offer unparalleled versatility in pod use.

Colors

Construction

5x	solid wall module
6x	glass wall module
1x	right-hand glass door module
7x	ventilation ceiling module
1x	electric ceiling module
1x	solid ceiling module
3x	power distribution unit
4x	Myco track lighting
√	integrated LED lamp
√	control panel

System furniture and accessories

2x	sofa without armrests L138
1x	table W81xL157
1x	TV hanger - two profiles
2x	shallow shelf
2x	display rail

Wine Red

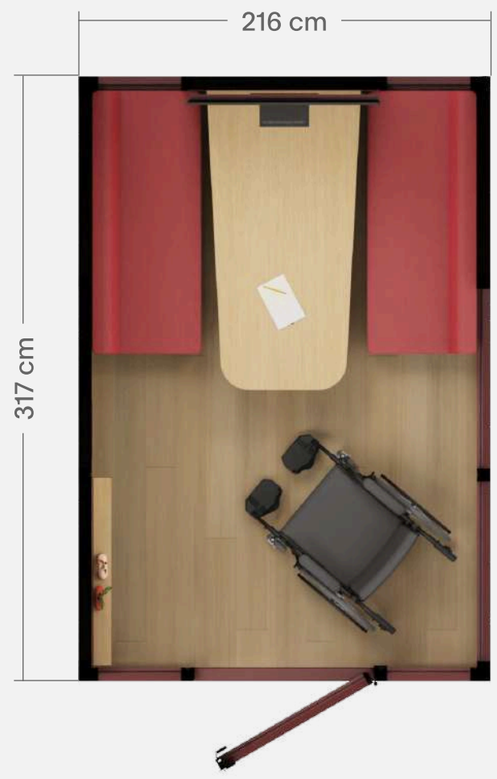

This visualization contains 3rd party products which are purely examplary and are not sold by Mute.
Acoustics acording to ISO 23351-1. Acoustic class depends on the configuration of walls and ceilings.
Presets like the one specified in this card can be combined into multifunctional hubs.
Elements of Mute Modular system may change. Availability of finishes and equipment varies by region.

Interested in this unit? Ask for an offer →

Mute © 2026 All rights reserved

Modular | MUTE.

Name	Function	Capacity	Room type	Modular size	Acoustics
Work 2x3 p2.v1.C	Work	2 people	Closed	2x3	B

Dimensions

216 x 317 x 238 / 226 cm
85.04 x 124.8 x 93.7 / 88.97 in.

Description

This room for collaborative work provides space and calm for two people. It's equipped with dedicated furniture and accessories, finished with third-party fit-outs.

It is a part of Modular Work set – areas designed purposefully to offer comfort and privacy for the individual, focused work, or small collaborative sessions.

Colors

Construction

6x	solid wall module
3x	glass wall module
1x	left-hand glass door module
3x	ventilation ceiling module
1x	electric ceiling module
2x	solid ceiling module
2x	power distribution unit
3x	Flask track lighting
√	integrated LED lamp
√	control panel

System furniture and accessories

2x	desk 100
4x	shallow shelf
1x	deep shelf with bookends
1x	two-drawer cabinet
2x	whiteboard
4x	display rail
4x	magnet (2 pcs)
2x	wall hook
√	curtain rail
√	curtain

Sage Green

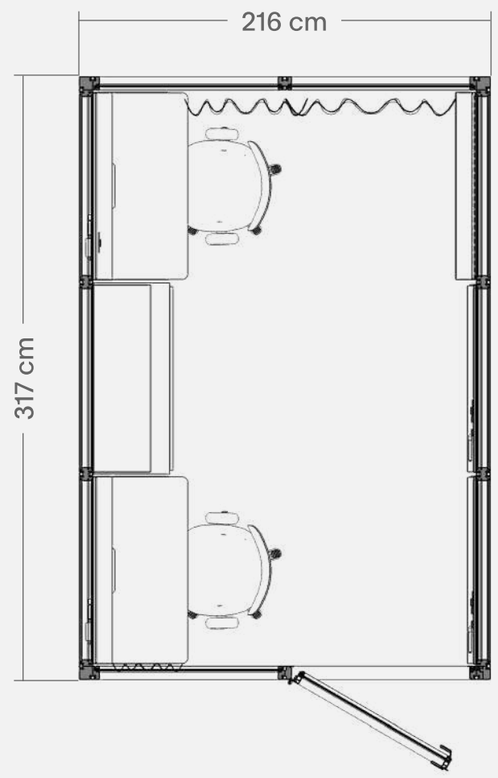

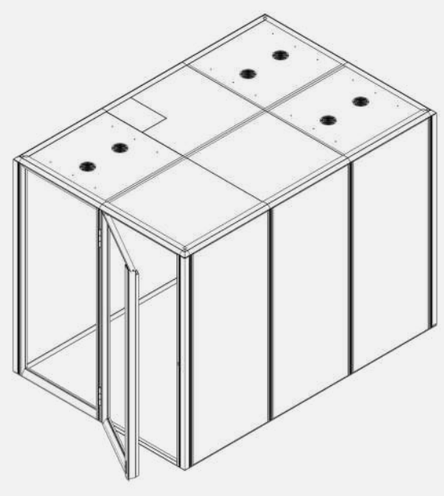

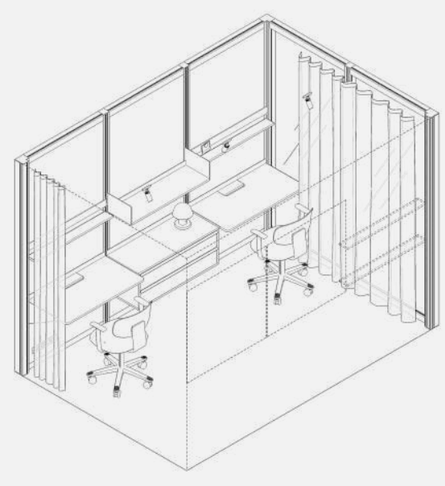

This visualization contains 3rd party products which are purely examplary and are not sold by Mute.
Acoustics acording to ISO 23351-1. Acoustic class depends on the configuration of walls and ceilings.
Presets like the one specified in this card can be combined into multifunctional hubs.
Elements of Mute Modular system may change. Availability of finishes and equipment varies by region.

Interested in this unit? Ask for an offer →

Mute © 2026 All rights reserved

Modular | MUTE.

Name	Function	Capacity	Room type	Modular size	Acoustics
Lounge 3x2 p4.v1.C	Lounge	4 people	Closed	3x2	A

Dimensions

317 x 216 x 238 / 226 cm
124.8 x 85.04 x 93.7 / 88.97 in.

Description

This room for relaxing provides space up to 4 people. It's equipped with dedicated furniture and accessories, finished with third-party fit-outs.

It is a part of Modular Lounge set – cozy areas for less-formal meet-ups and every casual occasion. Perfect for a waiting lounge, chill-out area, or gaming room.

Colors

Construction

7x	solid wall module
2x	glass wall module
1x	left-hand glass door module
3x	ventilation ceiling module
1x	electric ceiling module
2x	solid ceiling module
2x	power distribution unit
3x	Flask track lighting
√	integrated LED lamp
√	control panel

System furniture and accessories

3x	deep shelf
1x	TV hanger - two profiles
2x	wall hook

Ink Blue

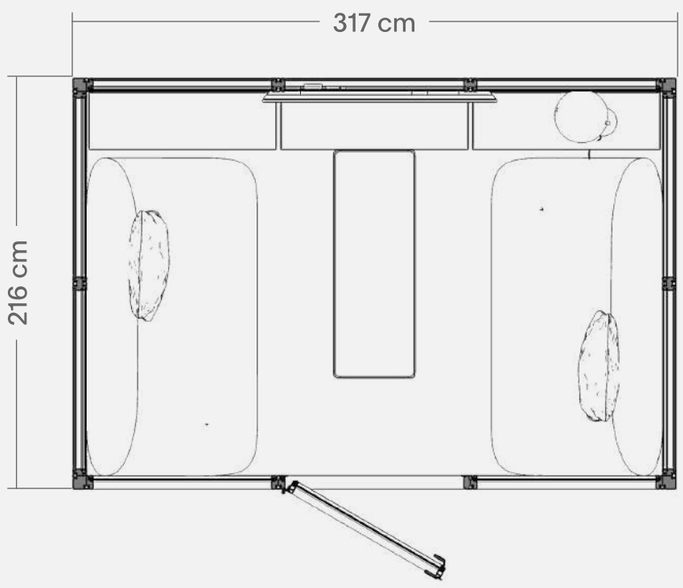

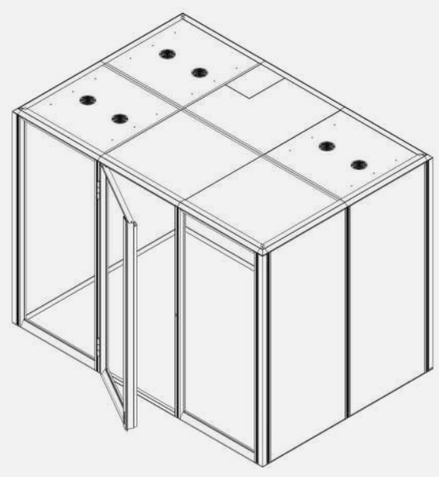

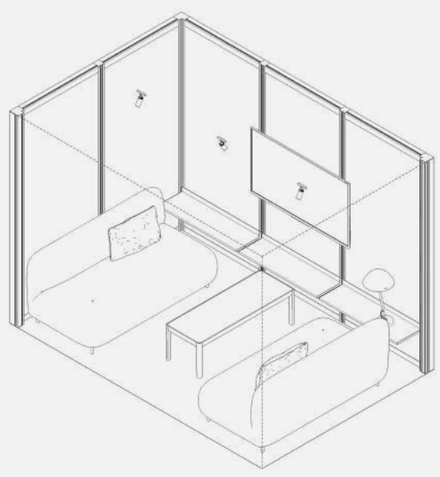

This visualization contains 3rd party products which are purely examplary and are not sold by Mute.
Acoustics acording to ISO 23351-1. Acoustic class depends on the configuration of walls and ceilings.
Presets like the one specified in this card can be combined into multifunctional hubs.
Elements of Mute Modular system may change. Availability of finishes and equipment varies by region.

Interested in this unit? Ask for an offer →

Mute © 2026 All rights reserved

Modular | MUTE.

Name	Function	Capacity	Room type	Modular size	Acoustics
Meet 3x2 p4.v2.C	Meet	4 people	Closed	3x2	B

Dimensions

317 x 216 x 238 / 226 cm
124.8 x 85.04 x 93.7 / 88.97 in.

Description

This Modular Pod, designed for spontaneous conversations and casual interactions, comfortably fits up to 4 people. It features Class B acoustics and a modular system funiture for maximum adaptability.

It's part of the world's largest acoustic pod collection, created to offer unparalleled versatility in pod use.

Colors

Construction

5x	solid wall module
4x	glass wall module
1x	left-hand glass door module
4x	ventilation ceiling module
1x	electric ceiling module
1x	solid ceiling module
1x	power distribution unit
√	integrated LED lamp
√	control panel

System furniture and accessories

2x	shallow shelf
2x	display rail
1x	magnet (2 pcs)

Moss Brown

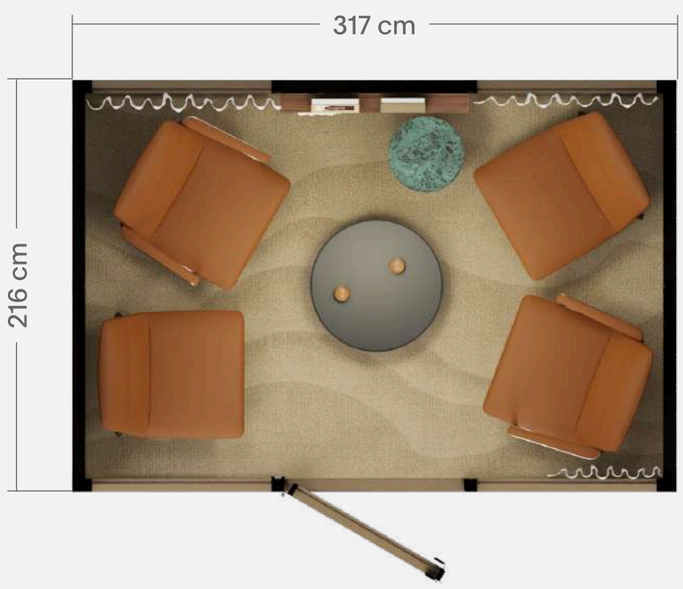

This visualization contains 3rd party products which are purely examplary and are not sold by Mute.
Acoustics acording to ISO 23351-1. Acoustic class depends on the configuration of walls and ceilings.
Presets like the one specified in this card can be combined into multifunctional hubs.
Elements of Mute Modular system may change. Availability of finishes and equipment varies by region.

Interested in this unit? Ask for an offer →

Mute © 2026 All rights reserved

Modular | MUTE.

Name	Function	Capacity	Room type	Modular size	Acoustics
Lounge 3x3 p5.v1.C	Lounge	5 people	Closed	3x3	B

Dimensions

317 x 317 x 238 / 226 cm
124.8 x 124.8 x 93.7 / 88.97 in.

Description

This room for relaxing provides space up to 5 people. It's equipped with dedicated furniture and accessories, finished with third-party fit-outs.

It is a part of Modular Lounge set – cozy areas for less-formal meet-ups and every casual occasion. Perfect for a waiting lounge, chill-out area, or gaming room.

Colors

Construction

6x	solid wall module
5x	glass wall module
1x	right-hand glass door module
4x	ventilation ceiling module
1x	electric ceiling module
4x	solid ceiling module
1x	power distribution unit
6x	Flask track lighting
√	integrated LED lamp
√	control panel

System furniture and accessories

1x	desk 100
4x	deep shelf
1x	deep shelf with right bookend
1x	display rail
1x	shallow shelf
2x	sliding door cabinet
1x	magnet (2 pcs)
√	curtain rail
√	curtain

Clay Red

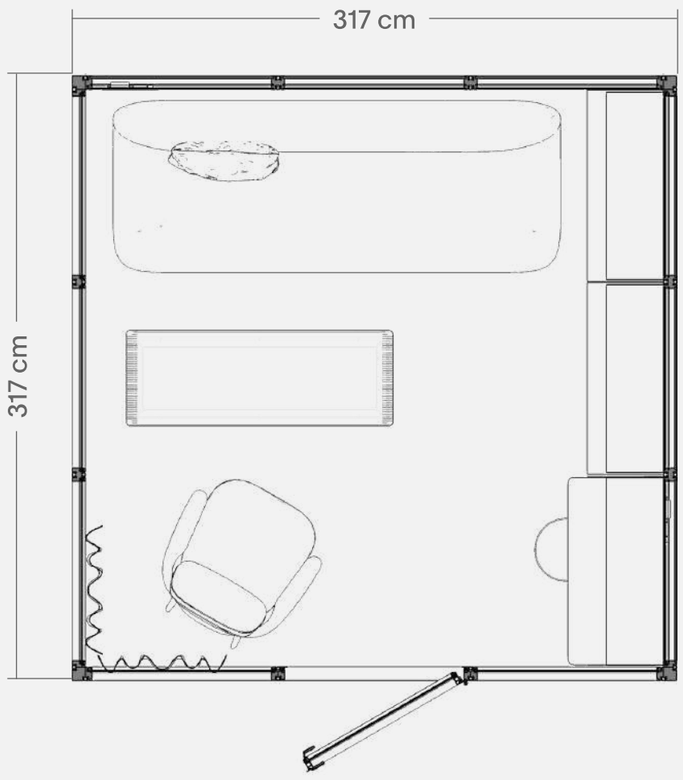

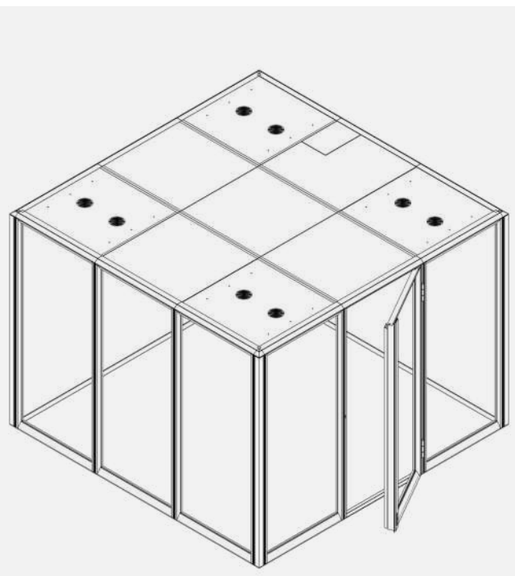

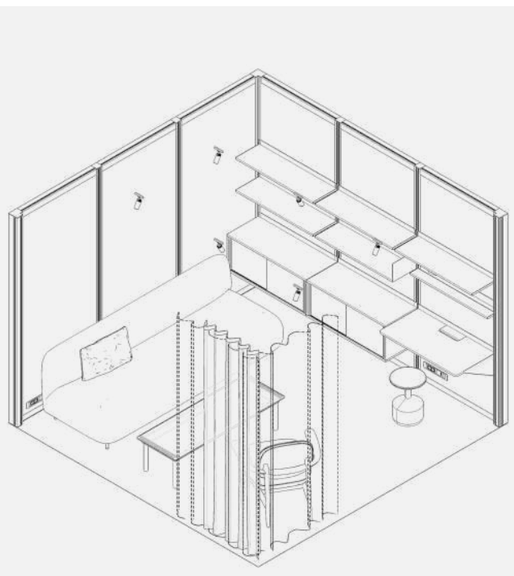

This visualization contains 3rd party products which are purely examplary and are not sold by Mute.
Acoustics acording to ISO 23351-1. Acoustic class depends on the configuration of walls and ceilings.
Presets like the one specified in this card can be combined into multifunctional hubs.
Elements of Mute Modular system may change. Availability of finishes and equipment varies by region.

Interested in this unit? Ask for an offer →

Mute © 2026 All rights reserved

Modular | MUTE.

Name	Function	Capacity	Room type	Modular size	
Lounge 3x3 p5.v1.0	Lounge	3 people	Open	3x3	Not stand-alone

Dimensions

317 x 317 x 238 / 226 cm
124.8 x 124.8 x 93.7 / 88.97 in.

Description

This room for relaxing provides space up to 5 people. It's equipped with dedicated furniture and accessories, finished with third-party fit-outs.

It is a part of Modular Lounge set – cozy areas for less-formal meet-ups and every casual occasion. Perfect for a waiting lounge, chill-out area, or gaming room.

Colors

Construction

6x	solid wall module
1x	electric ceiling module
8x	open ceiling module
1x	power distribution unit
6x	Flask track lighting
√	control panel

System furniture and accessories

2x	whiteboard
2x	shallow shelf
3x	display rail
1x	display rail hook (4 pcs)
4x	magnet (2 pcs)
√	curtain rail
√	curtain

Ash Gray

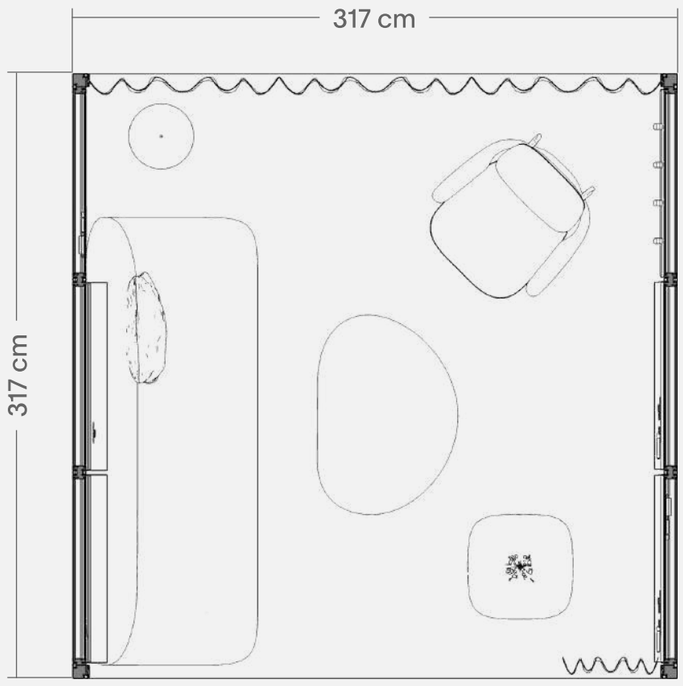

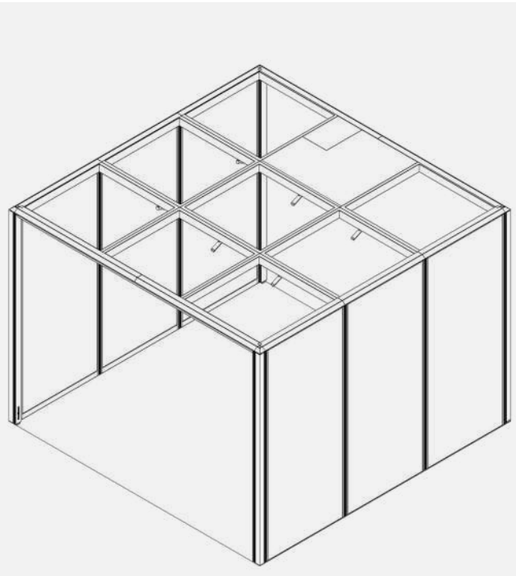

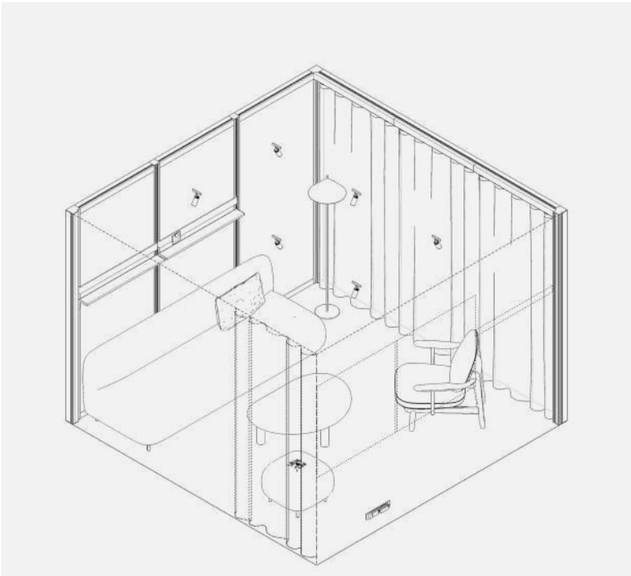

This visualization contains 3rd party products which are purely examplary and are not sold by Mute.
Acoustics acording to ISO 23351-1. Acoustic class depends on the configuration of walls and ceilings.
Presets like the one specified in this card can be combined into multifunctional hubs.
Elements of Mute Modular system may change. Availability of finishes and equipment varies by region.

Interested in this unit? Ask for an offer →

Mute © 2026 All rights reserved

Modular | MUTE.

Name	Function	Capacity	Room type	Modular size	Acoustics
Meet 3x3 p3.v1.C	Meet	3 people	Closed	3x3	B

Dimensions

317 x 317 x 238 / 226 cm
124.8 x 124.8 x 93.7 / 88.97 in.

Description

This room for meetups provides space up to 3 people. It's equipped with dedicated furniture and accessories, finished with third-party fit-outs.

It is a part of Modular Meet set – areas in plenty of sizes and capacities to host any gathering: team meet-ups, brainstorms, workshops, small talks, and more.

Colors

Construction

6x	solid wall module
5x	glass wall module
1x	left-hand glass door module
4x	ventilation ceiling module
1x	electric ceiling module
4x	solid ceiling module
2x	power distribution unit
4x	Flask track lighting
2x	Myco track lighting
√	integrated linear lamp
√	control panel

System furniture and accessories

1x	table W101xL165
4x	deep shelf
1x	deep shelf with right bookend
1x	TV hanger - two profile
3x	hinged door cabinet
1x	display stand
2x	wall hook
√	curtain rail
√	curtain

Clay Red

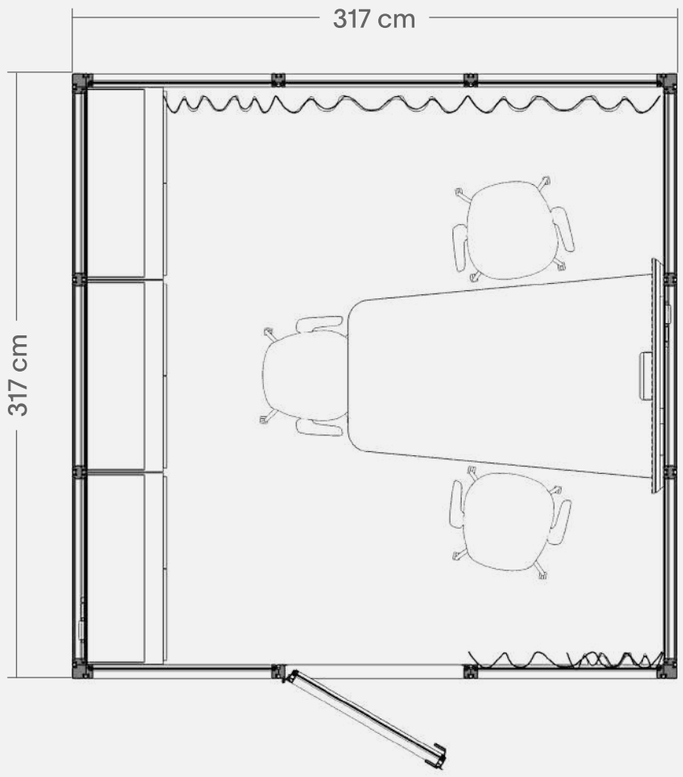

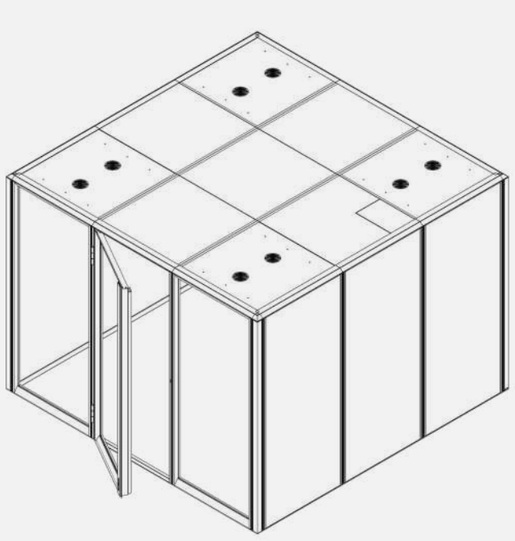

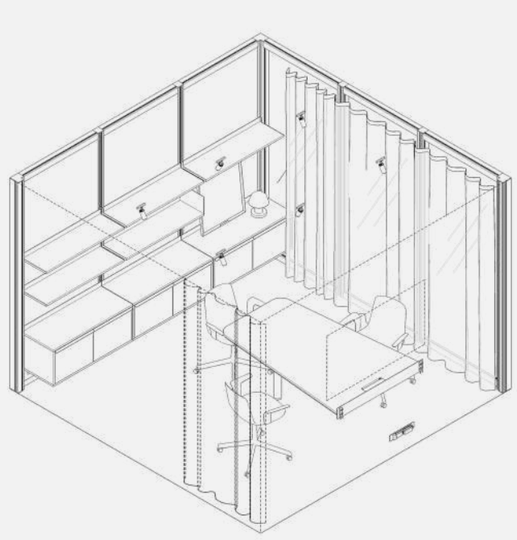

This visualization contains 3rd party products which are purely examplary and are not sold by Mute.
Acoustics acording to ISO 23351-1. Acoustic class depends on the configuration of walls and ceilings.
Presets like the one specified in this card can be combined into multifunctional hubs.
Elements of Mute Modular system may change. Availability of finishes and equipment varies by region.

Interested in this unit? Ask for an offer →

Mute © 2026 All rights reserved

Modular | MUTE.

Name	Function	Capacity	Room type	Modular size	Acoustics
Meet 3x3 p4.v1.C	Meet	4 people	Closed	3x3	B

Dimensions

317 x 317 x 238 / 226 cm
124.8 x 124.8 x 93.7 / 88.97 in.

Description

This room for meetups provides space up to 4 people. It's equipped with dedicated furniture and accessories, finished with third-party fit-outs.

It is a part of Modular Meet set – areas in plenty of sizes and capacities to host any gathering: team meet-ups, brainstorms, workshops, small talks, and more.

Colors

Construction

9x	solid wall module
2x	glass wall module
1x	right-hand glass door module
4x	ventilation ceiling module
1x	electric ceiling module
4x	solid ceiling module
2x	power distribution unit
6x	Flask track lighting
√	integrated linear lamp
√	control panel

System furniture and accessories

2x	whiteboard
1x	TV hanger - two profile
3x	shallow shelf
2x	display rail
4x	magnet (2 pcs)
1x	display stand
2x	wall hook
√	curtain rail
√	curtain

Sage Green

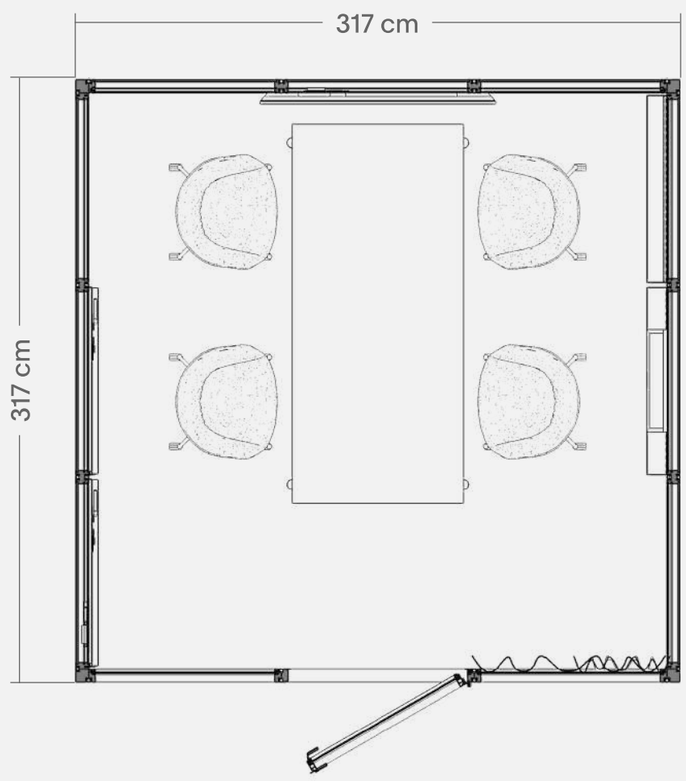

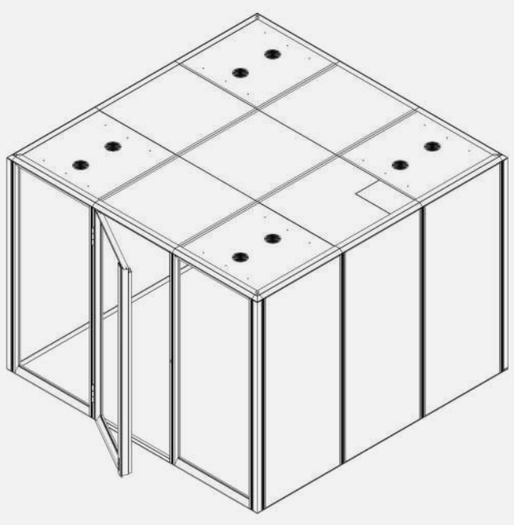

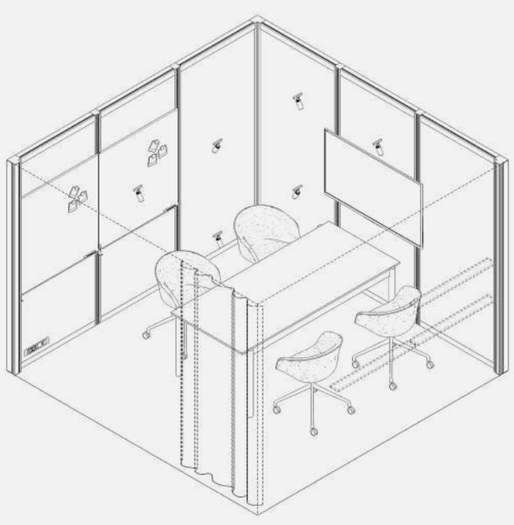

This visualization contains 3rd party products which are purely examplary and are not sold by Mute.
Acoustics acording to ISO 23351-1. Acoustic class depends on the configuration of walls and ceilings.
Presets like the one specified in this card can be combined into multifunctional hubs.
Elements of Mute Modular system may change. Availability of finishes and equipment varies by region.

Interested in this unit? Ask for an offer →

Mute © 2026 All rights reserved

Modular | MUTE.

Name	Function	Capacity	Room type	Modular size	Acoustics
Meet 3x3 p4.v2.C	Meet	4 people	Closed	3x3	B

Dimensions

317 x 317 x 238 / 226 cm
124.8 x 124.8 x 93.7 / 88.97 in.

Description

This room for meetups provides space up to 4 people. It's equipped with dedicated furniture and accessories, finished with third-party fit-outs.

It is a part of Modular Meet set – areas in plenty of sizes and capacities to host any gathering: team meet-ups, brainstorms, workshops, small talks, and more.

Colors

Construction

6x	solid wall module
5x	glass wall module
1x	left-hand glass door module
4x	ventilation ceiling module
1x	electric ceiling module
4x	solid ceiling module
2x	power distribution unit
6x	Myco track lighting
√	integrated linear lamp
√	control panel

System furniture and accessories

2x	whiteboard
1x	TV hanger - two profile
2x	shallow shelf
2x	display rail
4x	magnets (2 pcs)
2x	wall hook
√	curtain rail
√	curtain

Ash Gray

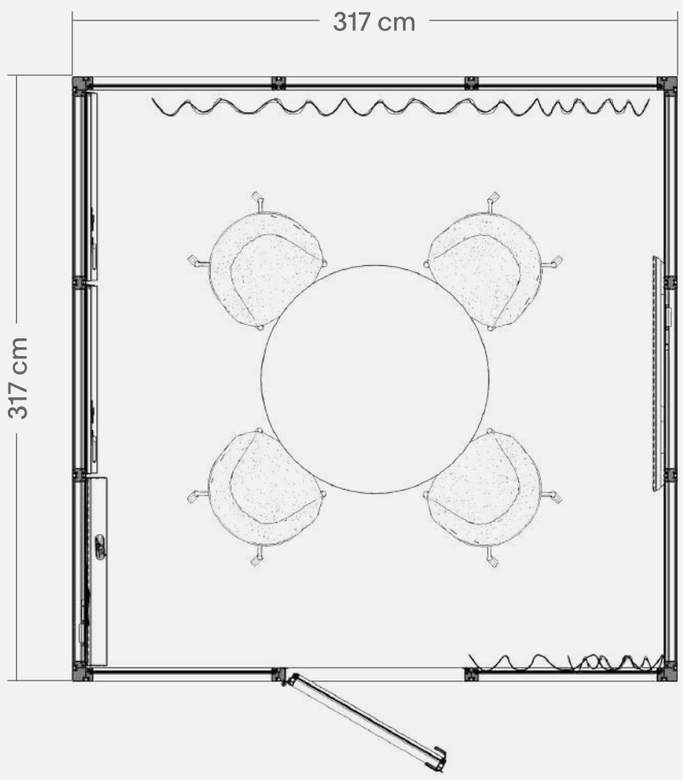

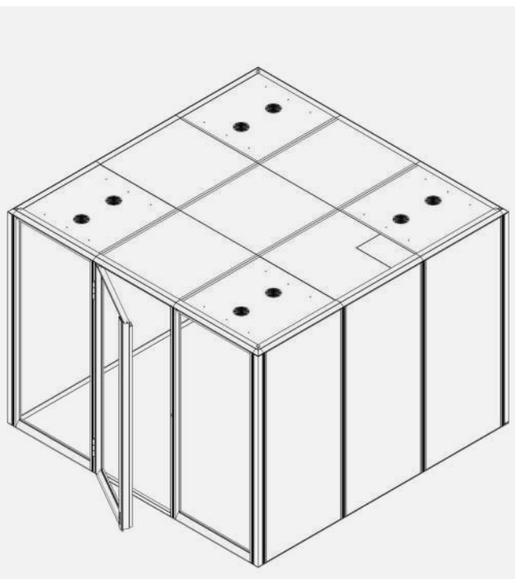

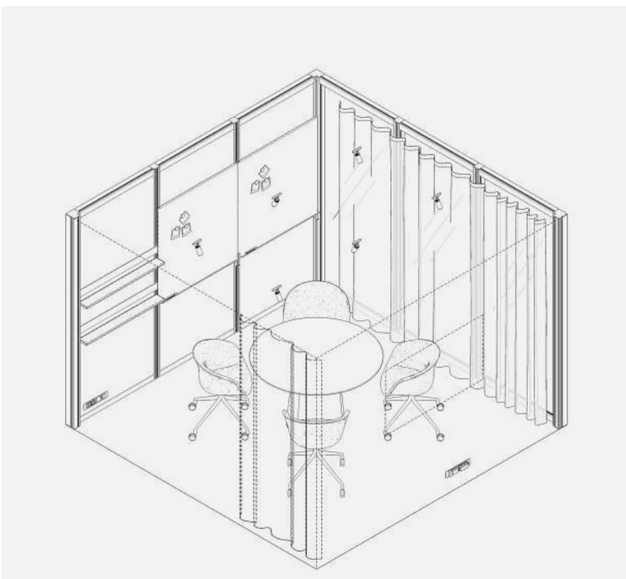

This visualization contains 3rd party products which are purely examplary and are not sold by Mute.
Acoustics acording to ISO 23351-1. Acoustic class depends on the configuration of walls and ceilings.
Presets like the one specified in this card can be combined into multifunctional hubs.
Elements of Mute Modular system may change. Availability of finishes and equipment varies by region.

Interested in this unit? Ask for an offer →

Mute © 2026 All rights reserved

Modular | MUTE.

Name	Function	Capacity	Room type	Modular size	
Meet 3x3 p4.v4.O	Meet	4 people	Open	3x3	Not stand-alone

Dimensions

317 x 317 x 238 / 226 cm
124.8 x 124.8 x 93.7 / 88.97 in.

Description

This room for meetups provides space up to 4 people. It's equipped with dedicated furniture and accessories, finished with third-party fit-outs.

It is a part of Modular Meet set – areas in plenty of sizes and capacities to host any gathering: team meet-ups, brainstorms, workshops, small talks, and more.

Colors

Construction

6x	solid wall module
1x	electric ceiling module
8x	open ceiling module
1x	power distribution unit
6x	Flask track lighting
√	control panel

System furniture and accessories

2x	whiteboard
2x	shallow shelf
3x	display rail
1x	display rail hook (4 pcs)
4x	magnets (2 pcs)
2x	wall hook
√	curtain rail
√	curtain

Ink Blue

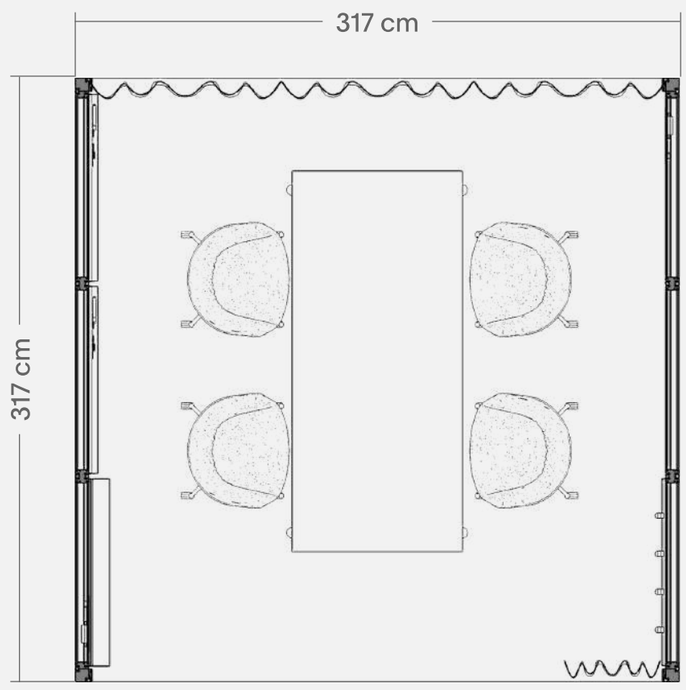

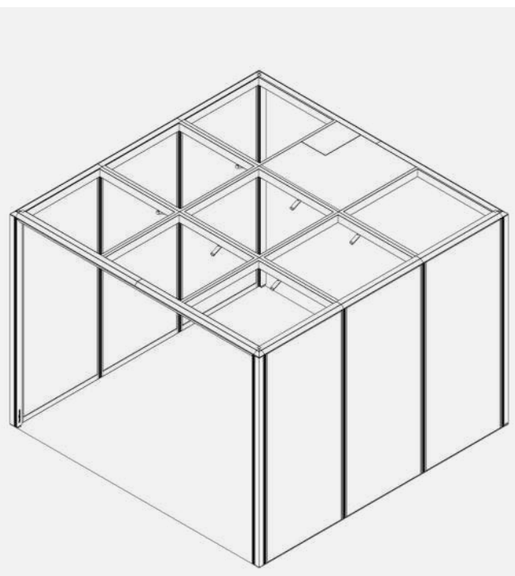

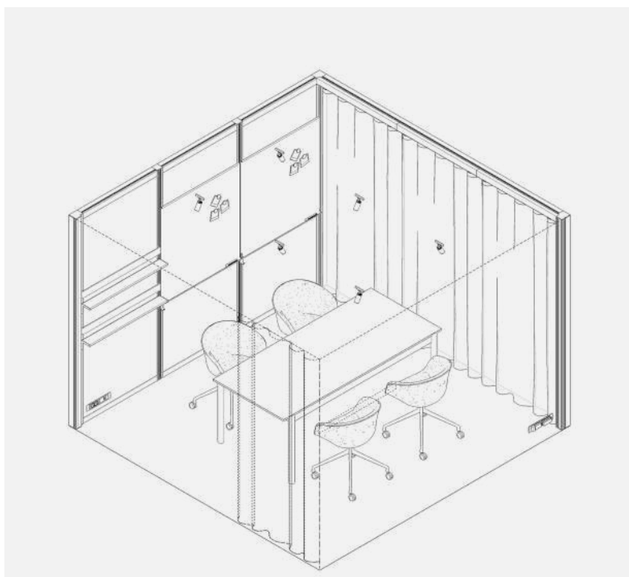

This visualization contains 3rd party products which are purely examplary and are not sold by Mute.
Acoustics acording to ISO 23351-1. Acoustic class depends on the configuration of walls and ceilings.
Presets like the one specified in this card can be combined into multifunctional hubs.
Elements of Mute Modular system may change. Availability of finishes and equipment varies by region.

Interested in this unit? Ask for an offer →

Mute © 2026 All rights reserved

Modular | MUTE.

Name	Function	Capacity	Room type	Modular size
Meet 3x3 p6.v1.O	Meet	6 people	Open	3x3

Dimensions

317 x 317 x 238 / 226 cm
124.8 x 124.8 x 93.7 / 88.97 in.

Description

This room for meetups provides space up to 6 people. It's equipped with dedicated furniture and accessories, finished with third-party fit-outs.

It is a part of Modular Meet set – areas in plenty of sizes and capacities to host any gathering: team meet-ups, brainstorms, workshops, small talks, and more.

Colors

Construction

9x	solid wall module
1x	electric ceiling module
8x	open ceiling module
1x	power distribution unit
6x	Flask track lighting
√	control panel

System furniture and accessories

2x	whiteboard
1x	TV hanger - two profile
2x	shallow shelf
3x	display rail
1x	display rail hook (4 pcs)
4x	magnets (2 pcs)
2x	wall hook
√	curtain rail
√	curtain

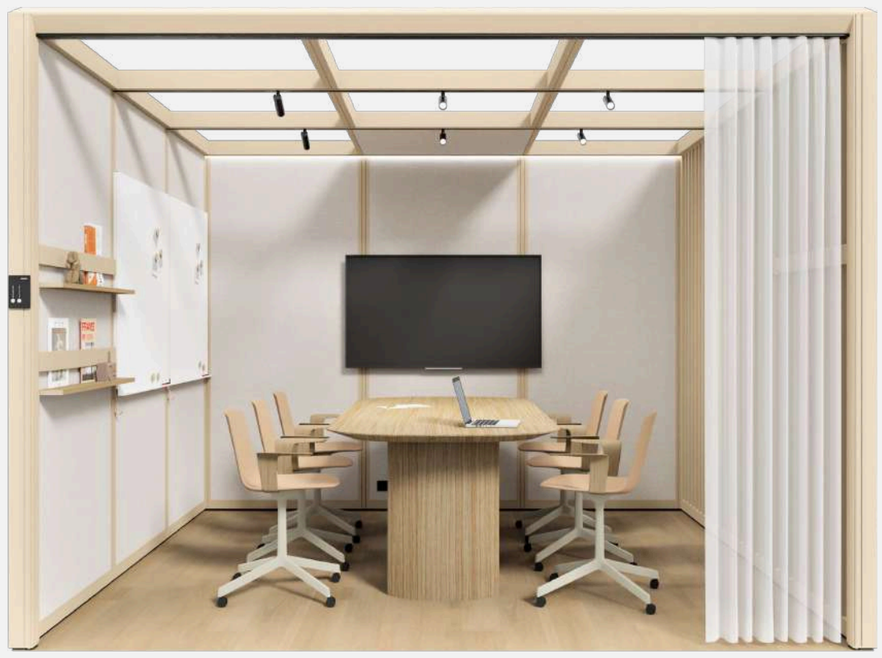

Sand Beige

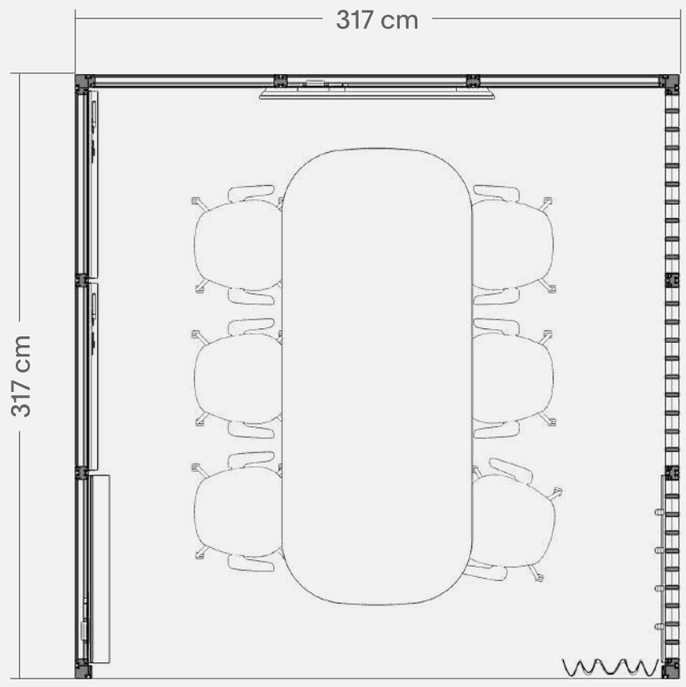

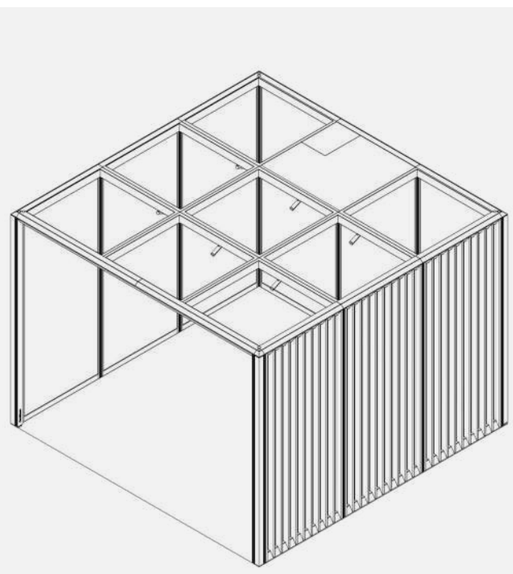

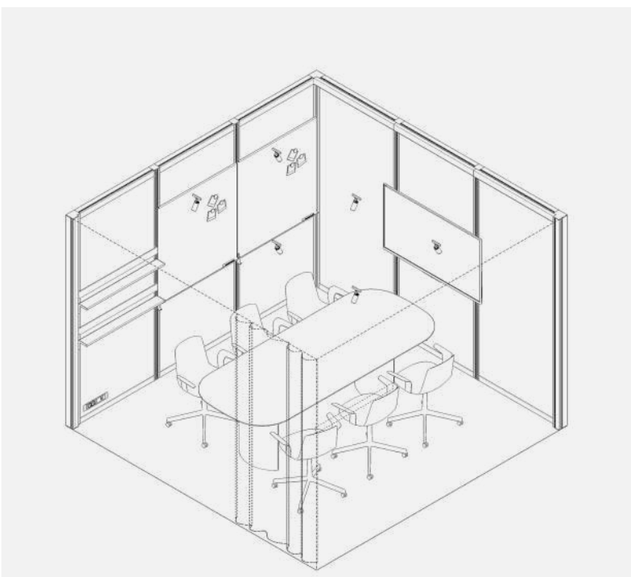

This visualization contains 3rd party products which are purely examplary and are not sold by Mute.
Acoustics acording to ISO 23351-1. Acoustic class depends on the configuration of walls and ceilings.
Presets like the one specified in this card can be combined into multifunctional hubs.
Elements of Mute Modular system may change. Availability of finishes and equipment varies by region.

Interested in this unit? Ask for an offer →

Mute © 2026 All rights reserved

Modular | MUTE.

Name	Function	Capacity	Room type	Modular size	
Meet 3x3 p6.v2.O	Meet	6 people	Open	3x3	Not stand-alone

Dimensions

317 x 317 x 238 / 226 cm
124.8 x 124.8 x 93.7 / 88.97 in.

Description

This room for meetups provides space up to 6 people. It's equipped with dedicated furniture and accessories, finished with third-party fit-outs.

It is a part of Modular Meet set – areas in plenty of sizes and capacities to host any gathering: team meet-ups, brainstorms, workshops, small talks, and more.

Colors

Construction

6x	solid wall module
1x	electric ceiling module
8x	open ceiling module
1x	power distribution unit
6x	Flask track lighting
√	control panel

System furniture and accessories

2x	whiteboard
2x	shallow shelf
3x	display rail
1x	display rail hook (4 pcs)
4x	magnets (2 pcs)
1x	display stand
√	curtain rail
√	curtain

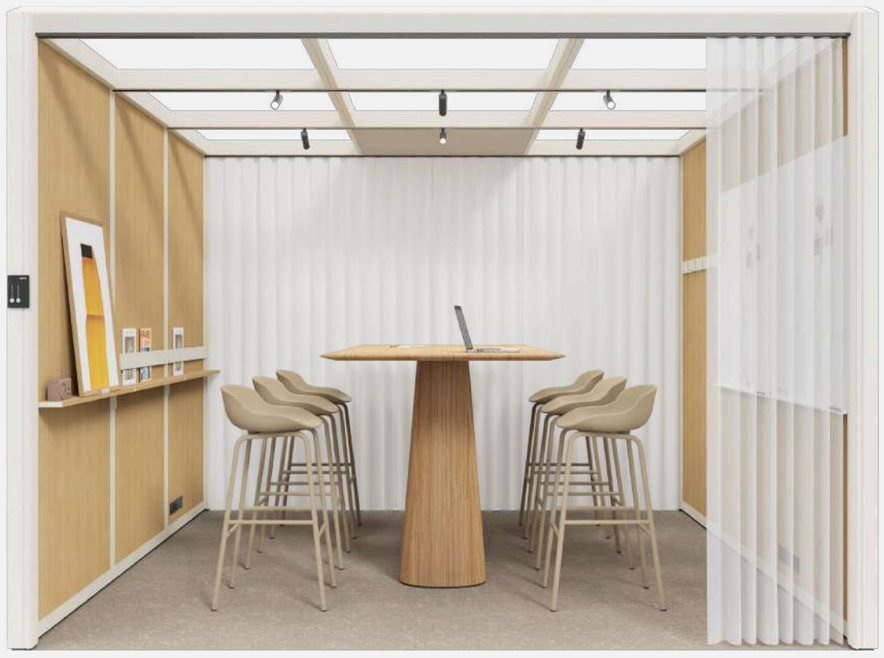

Moon White

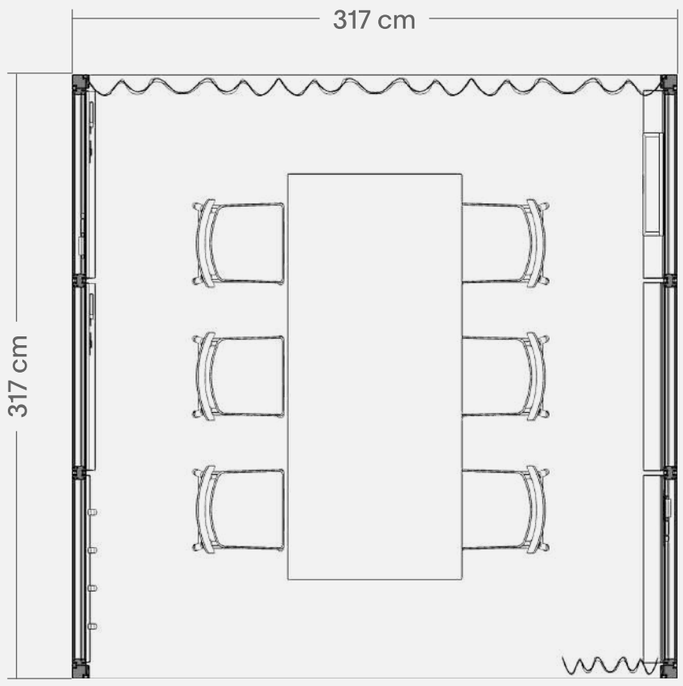

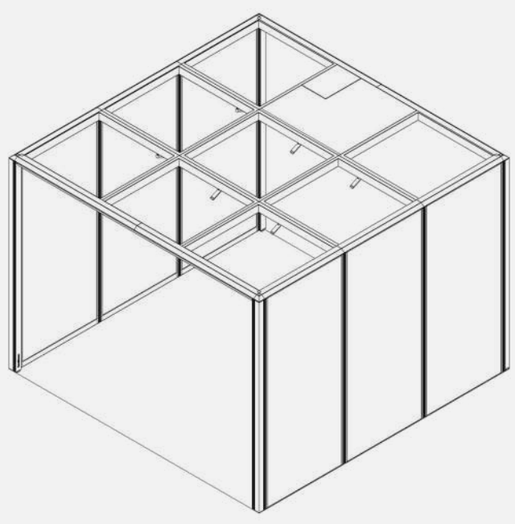

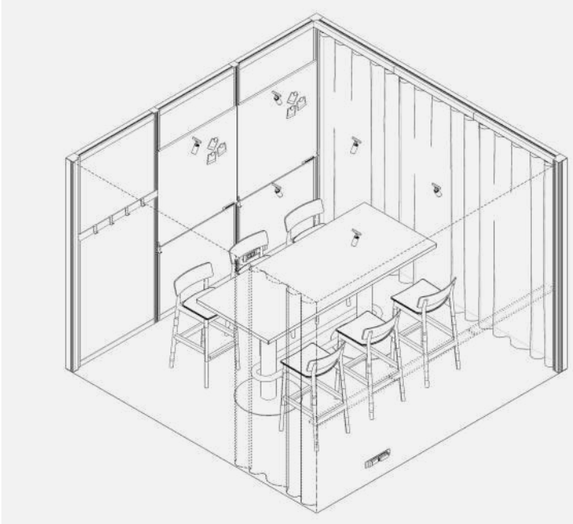

This visualization contains 3rd party products which are purely examplary and are not sold by Mute.
Acoustics acording to ISO 23351-1. Acoustic class depends on the configuration of walls and ceilings.
Presets like the one specified in this card can be combined into multifunctional hubs.
Elements of Mute Modular system may change. Availability of finishes and equipment varies by region.

Interested in this unit? Ask for an offer →

Mute © 2026 All rights reserved

Modular | MUTE.

Name	Function	Capacity	Room type	Modular size	Acoustics
Work 3x3 p2.v1.C	Work	2 people	Closed	3x3	B

Dimensions

317 x 317 x 238 / 226 cm
124.8 x 124.8 x 93.7 / 88.97 in.

Description

This room for collaborative work provides space and calm for two people. It's equipped with dedicated furniture and accessories, finished with third-party fit-outs.

It is a part of Modular Work set – areas designed purposefully to offer comfort and privacy for the individual, focused work, or small collaborative sessions.

Colors

Construction

6x	solid wall module
5x	glass wall module
1x	left-hand glass door module
4x	ventilation ceiling module
1x	electric ceiling module
4x	solid ceiling module
2x	power distribution unit
6x	Flask track lighting
√	integrated linear lamp
√	control panel

System furniture and accessories

6x	deep shelf
2x	single-drawer cabinet
1x	open shelf cabinet
1x	TV hanger - two profiles
2x	wall hook
√	curtain rail
√	curtain

Clay Red

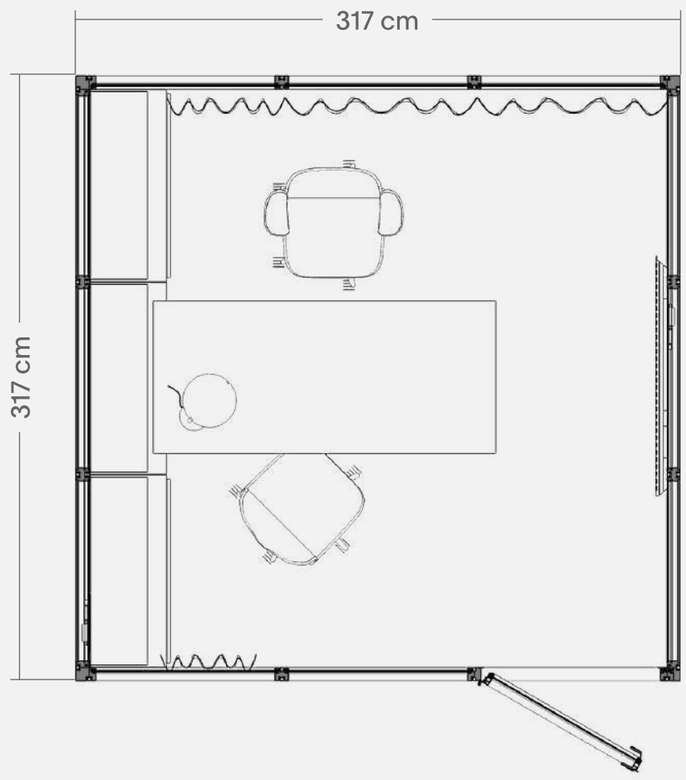

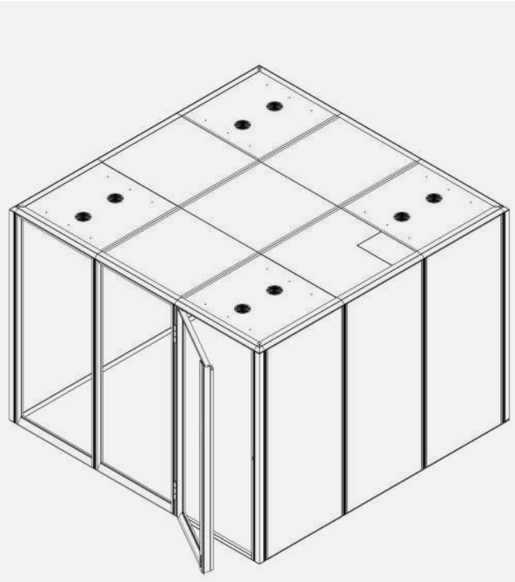

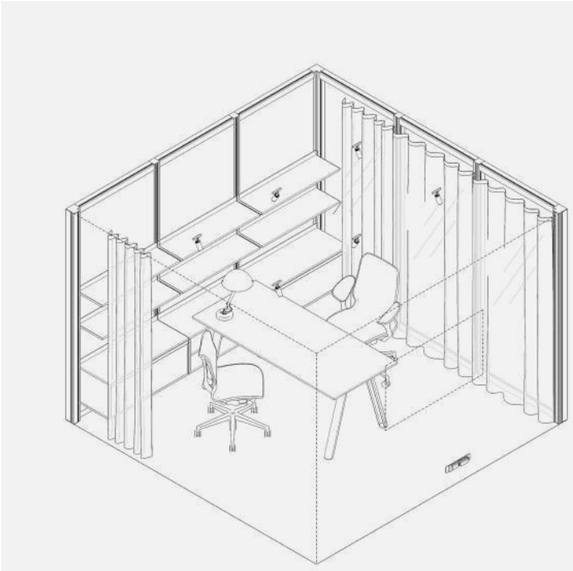

This visualization contains 3rd party products which are purely examplary and are not sold by Mute.
Acoustics acording to ISO 23351-1. Acoustic class depends on the configuration of walls and ceilings.
Presets like the one specified in this card can be combined into multifunctional hubs.
Elements of Mute Modular system may change. Availability of finishes and equipment varies by region.

Interested in this unit? Ask for an offer →

Mute © 2026 All rights reserved

Modular | MUTE.

Name	Function	Capacity	Room type	Modular size
Work 3x3 p4.v1.O	Work	4 people	Open	3x3

Dimensions

317 x 317 x 238 / 226 cm
124.8 x 124.8 x 93.7 / 88.97 in.

Description

This room for collaborative work provides space and calm for four people. It's equipped with dedicated furniture and accessories, finished with third-party fit-outs.

It is a part of Modular Work set – areas designed purposefully to offer comfort and privacy for the individual, focused work, or small collaborative sessions.

Colors

Construction

9x	solid wall module
1x	electric ceiling module
8x	open ceiling module
1x	power distribution unit
6x	Flask track lighting
√	control panel

System furniture and accessories

2x	whiteboard
6x	deep shelf
1x	display rail
1x	display rail hook (4 pcs)
1x	open shelf cabinet
2x	two-drawer cabinet
4x	magnet (2 pcs)
2x	wall hook
√	curtain rail
√	curtain

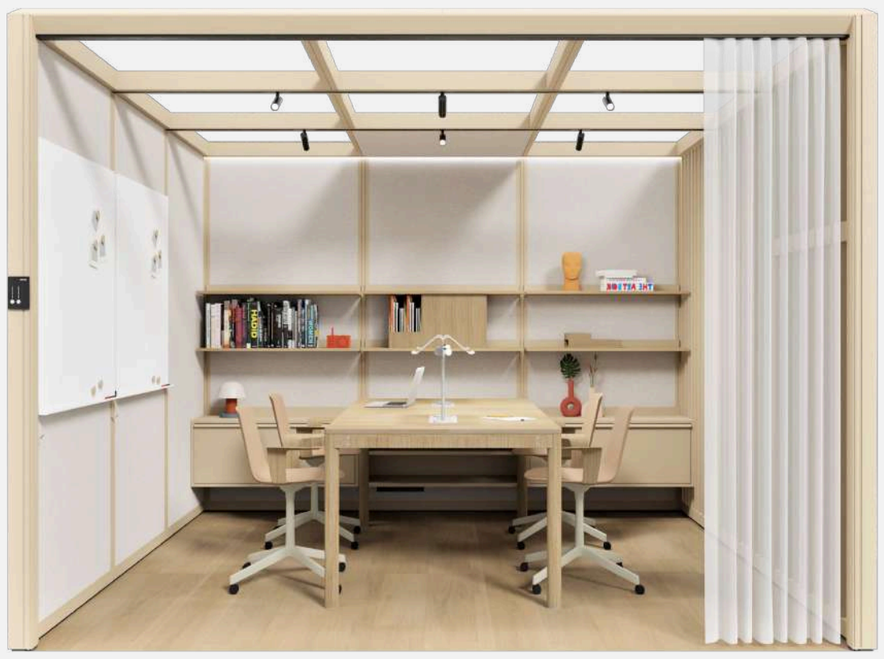

Sand Beige

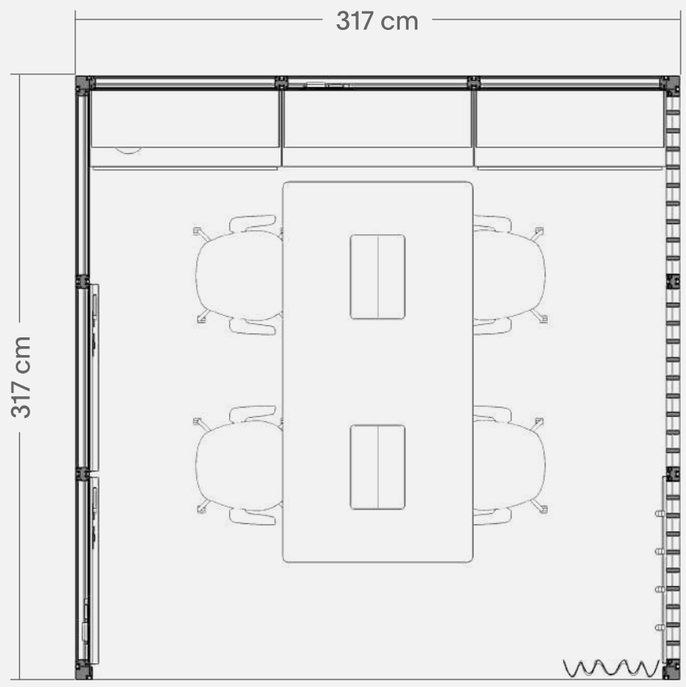

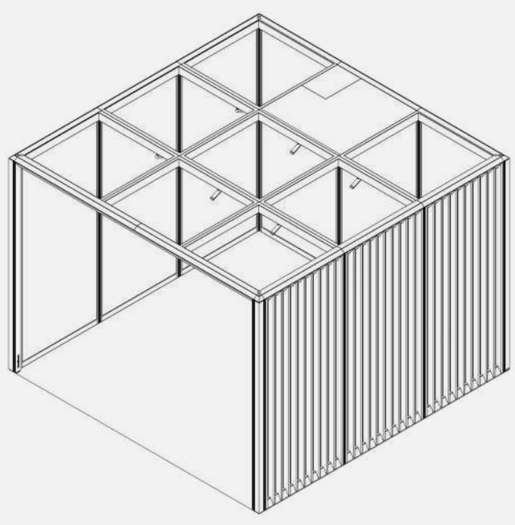

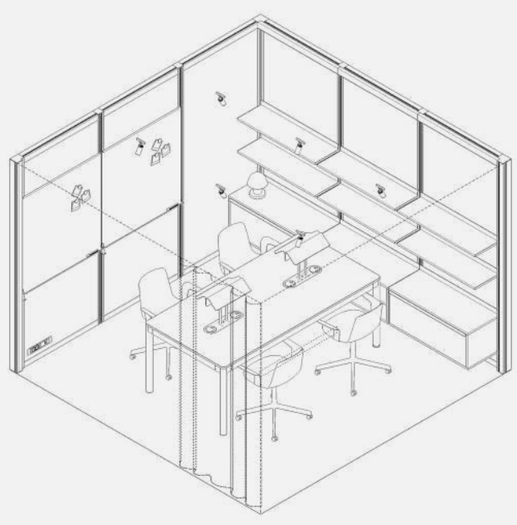

This visualization contains 3rd party products which are purely examplary and are not sold by Mute.
Acoustics acording to ISO 23351-1. Acoustic class depends on the configuration of walls and ceilings.
Presets like the one specified in this card can be combined into multifunctional hubs.
Elements of Mute Modular system may change. Availability of finishes and equipment varies by region.

Interested in this unit? Ask for an offer →

Mute © 2026 All rights reserved

Modular | MUTE.

Name	Function	Capacity	Room type	Modular size	Acoustics
Meet 4x3 p6.v1.C	Meet	6 people	Closed	4x3	B

Dimensions

418 x 317 x 238 / 226 cm
164.57 x 124.8 x 93.7 / 88.97 in.

Description

This room for meetups provides space up to 6 people. It's equipped with dedicated furniture and accessories, finished with third-party fit-outs.

It is a part of Modular Meet set – areas in plenty of sizes and capacities to host any gathering: team meet-ups, brainstorms, workshops, small talks, and more.

Colors

Construction

6x	solid wall module
7x	glass wall module
1x	left-hand glass door module
4x	ventilation ceiling module
1x	electric ceiling module
7x	solid ceiling module
2x	power distribution unit
9x	Myco track lighting
√	integrated linear lamp
√	control panel

System furniture and accessories

4x	deep shelf
1x	deep shelf with left bookend
2x	deep drawer cabinet
1x	two-drawer cabinet
1x	TV hanger - two profile
1x	display stand
2x	wall hook
√	curtain rail
√	curtain

Sand Beige

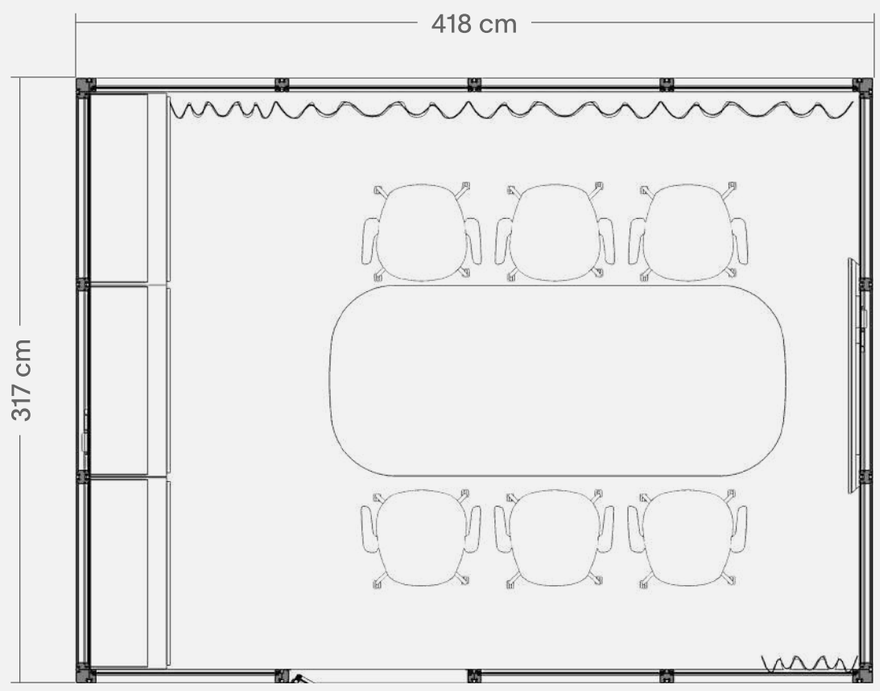

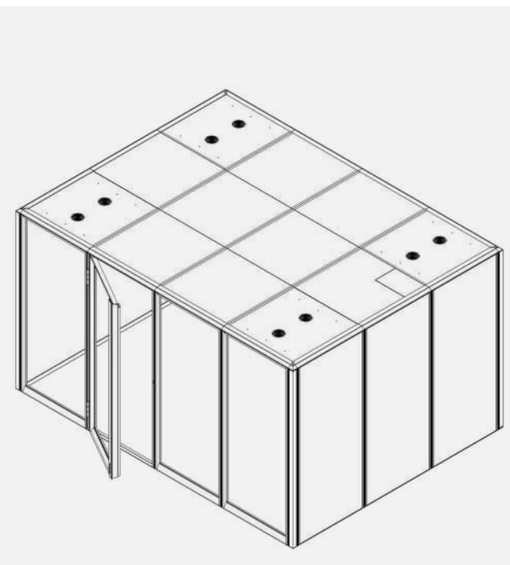

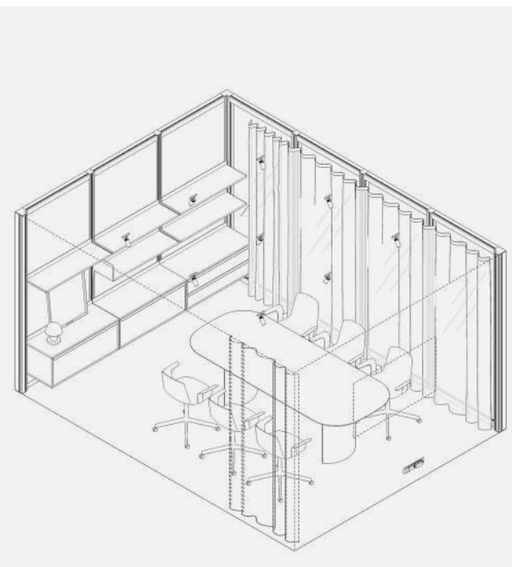

This visualization contains 3rd party products which are purely examplary and are not sold by Mute.
Acoustics acording to ISO 23351-1. Acoustic class depends on the configuration of walls and ceilings.
Presets like the one specified in this card can be combined into multifunctional hubs.
Elements of Mute Modular system may change. Availability of finishes and equipment varies by region.

Interested in this unit? Ask for an offer →

Mute © 2026 All rights reserved

Modular | MUTE.

Name	Function	Capacity	Room type	Modular size	Acoustics
Work 4x4 p4.v1.C	Work	4 people	Closed	4x4	A

Dimensions

418 x 418 x 238 / 226 cm
164.57 x 164.57 x 93.7 / 88.97 in.

Description

This room for collaborative work provides space and calm for four people. It's equipped with dedicated furniture and accessories, finished with third-party fit-outs. It is a part of Modular Work set – areas designed purposefully to offer comfort and privacy for the individual, focused work, or small collaborative sessions.

Colors

Construction

12x	solid wall module
3x	glass wall module
1x	left-hand glass door module
4x	ventilation ceiling module
1x	electric ceiling module
13x	solid ceiling module
2x	power distribution unit
9x	Myco track lighting
√	integrated linear lamp
√	control panel

System furniture and accessories

2x	whiteboard
1x	TV hanger - two profile
5x	deep shelf
1x	deep shelf with right bookend
2x	shallow shelf
2x	display rail
2x	single-drawer cabinet
2x	open shelf cabinet
1x	display stand
4x	magnet (2 pcs)
2x	wall hook
√	curtain rail
√	curtain

Sage Green

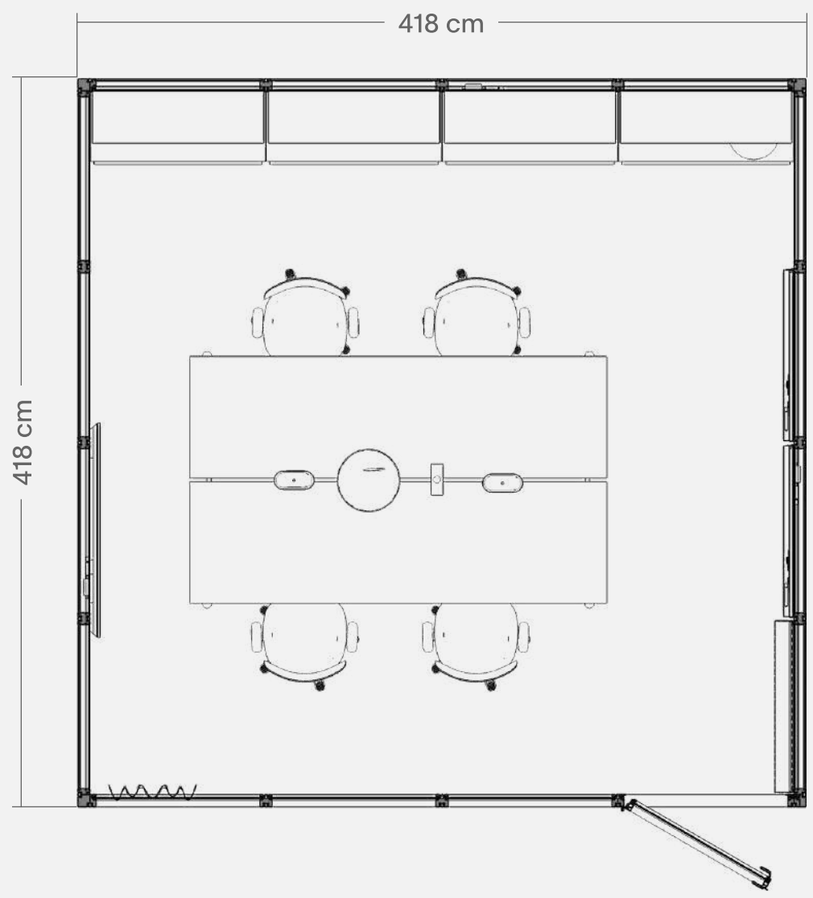

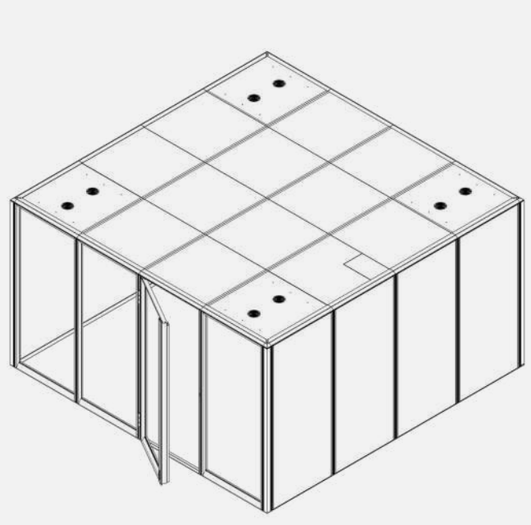

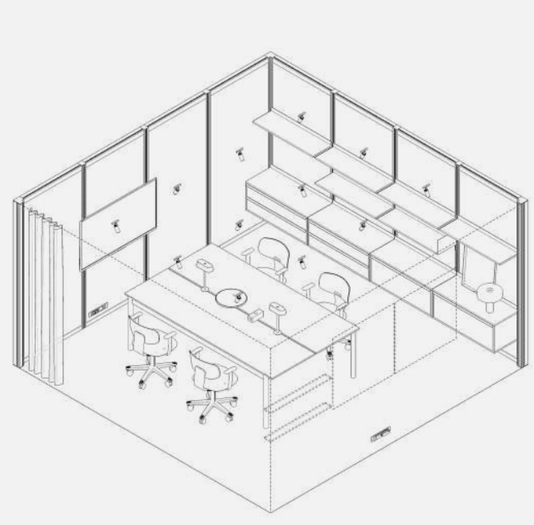

This visualization contains 3rd party products which are purely examplary and are not sold by Mute.
Acoustics acording to ISO 23351-1. Acoustic class depends on the configuration of walls and ceilings.
Presets like the one specified in this card can be combined into multifunctional hubs.
Elements of Mute Modular system may change. Availability of finishes and equipment varies by region.

Interested in this unit? Ask for an offer →

Mute © 2026 All rights reserved

Modular | MUTE.

Name	Function	Capacity	Room type	Modular size	Acoustics
Meet 4x4 p6.v1.C	Meet	6 people	Closed	4x4	B

Dimensions

418 x 418 x 238 / 226 cm
164.57 x 164.57 x 93.7 / 88.97 in.

Description

This room for meetups provides space up to 6 people. It's equipped with dedicated furniture and accessories, finished with third-party fit-outs.

It is a part of Modular Meet set – areas in plenty of sizes and capacities to host any gathering: team meet-ups, brainstorms, workshops, small talks, and more.

Colors

Construction

8x	solid wall module
7x	glass wall module
1x	left-hand glass door module
4x	ventilation ceiling module
1x	electric ceiling module
11x	solid ceiling module
2x	power distribution unit
9x	Myco track lighting
√	integrated linear lamp
√	control panel

System furniture and accessories

5x	deep shelf
1x	deep shelf with left bookend
1x	TV hanger - two profile
1x	two-drawer cabinet
3x	single-drawer cabinet
1x	display stand
2x	wall hook
√	curtain rail
√	curtain

Ink Blue

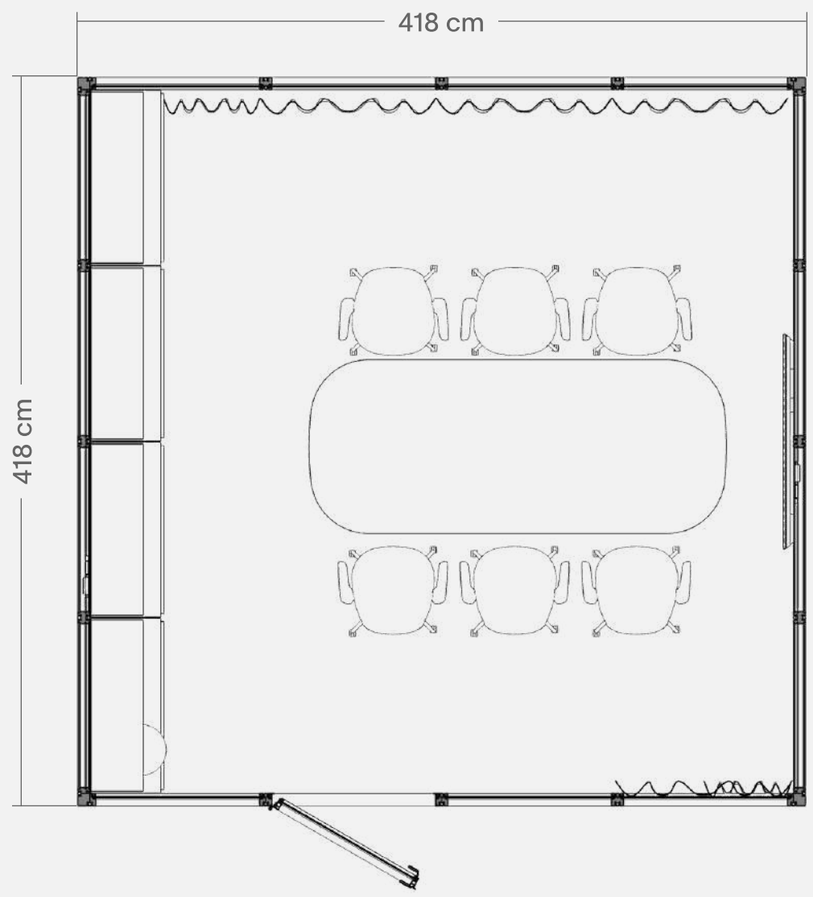

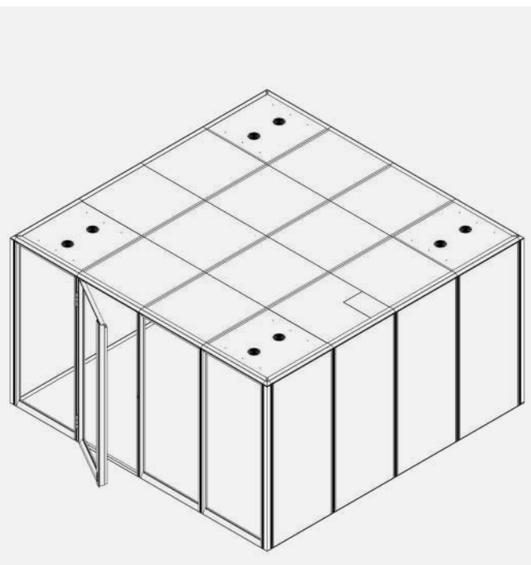

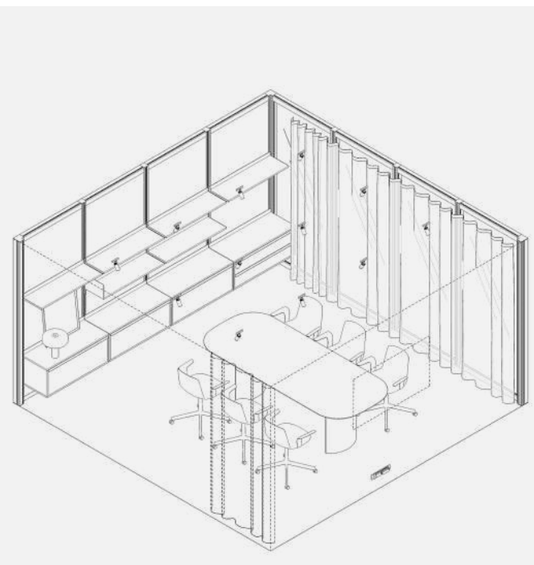

This visualization contains 3rd party products which are purely examplary and are not sold by Mute.
Acoustics acording to ISO 23351-1. Acoustic class depends on the configuration of walls and ceilings.
Presets like the one specified in this card can be combined into multifunctional hubs.
Elements of Mute Modular system may change. Availability of finishes and equipment varies by region.

Interested in this unit? Ask for an offer →

Mute © 2026 All rights reserved

Modular | MUTE.

Name	Function	Capacity	Room type	Modular size	Acoustics
Meet 5x4 p6.v1.C	Meet	6 people	Closed	5x4	B

Dimensions

519 x 418 x 238 / 226 cm
204.33 x 164.57 x 93.7 / 88.97 in.

Description

This room for meetups provides space up to 6 people. It's equipped with dedicated furniture and accessories, finished with third-party fit-outs.

It is a part of Modular Meet set – areas in plenty of sizes and capacities to host any gathering: team meet-ups, brainstorms, workshops, small talks, and more.

Colors

Construction

8x	solid wall module
9x	glass wall module
1x	left-hand glass door module
4x	ventilation ceiling module
1x	electric ceiling module
15x	solid ceiling module
2x	power distribution unit
8x	Flask track lighting
√	integrated linear lamp
√	control panel

System furniture and accessories

5x	deep shelf
1x	deep shelf with left bookend
1x	display stand
1x	display rail hook (4 pcs)
1x	TV hanger - two profile
3x	single-drawer cabinet
1x	two-drawer cabinet
√	curtain rail
√	curtain

Sage Green

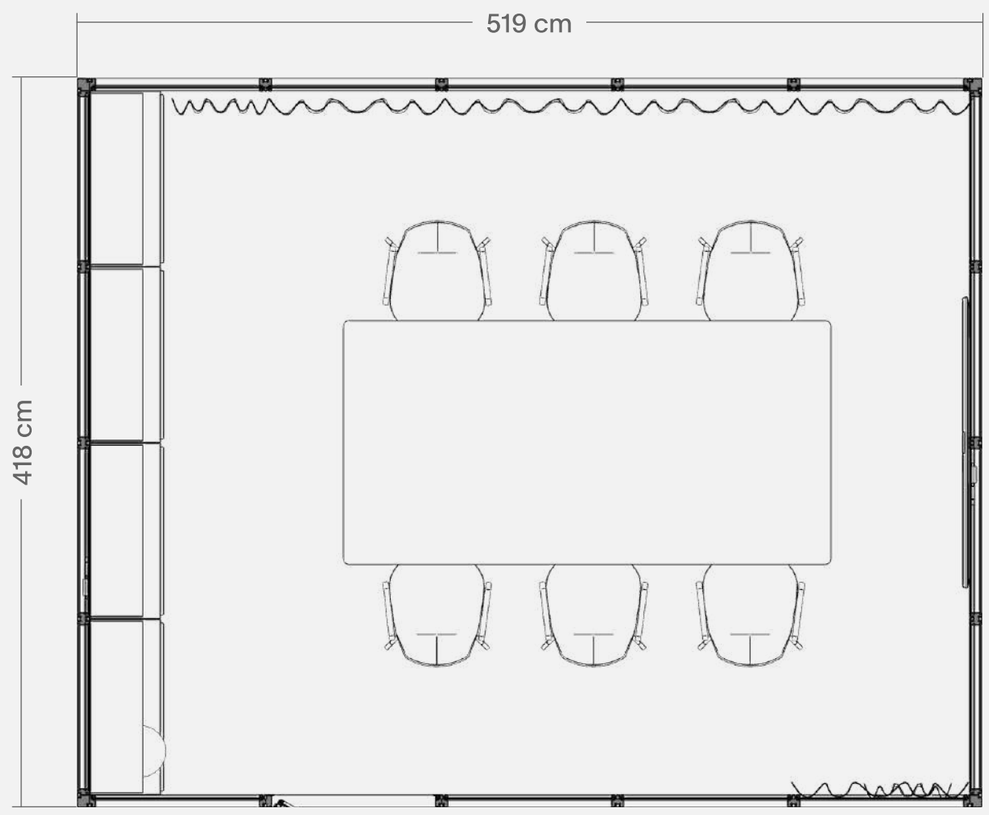

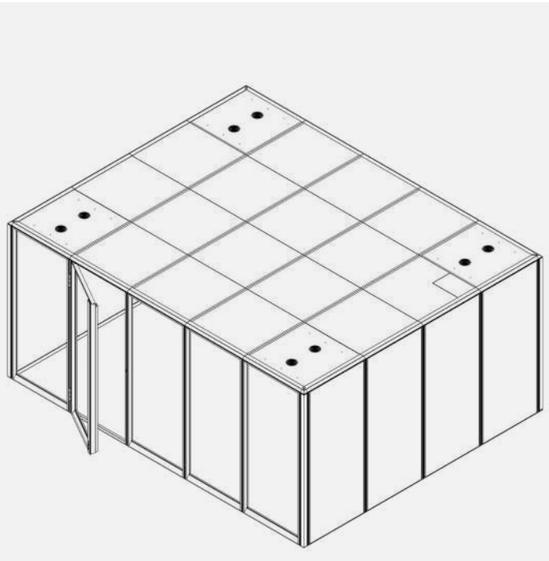

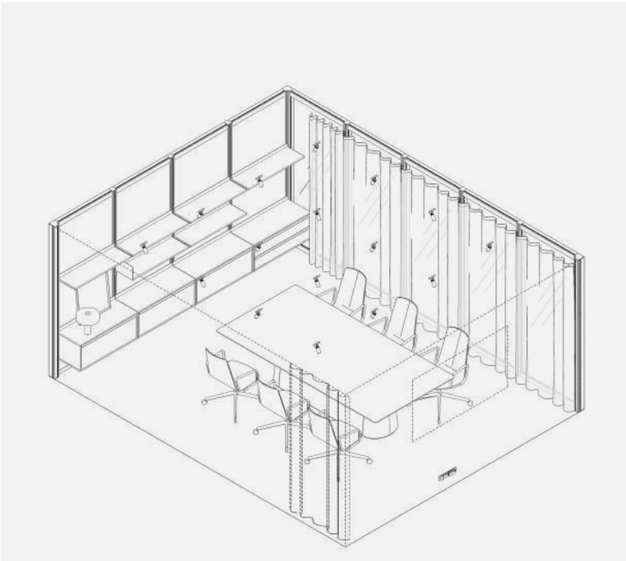

This visualization contains 3rd party products which are purely examplary and are not sold by Mute.
Acoustics acording to ISO 23351-1. Acoustic class depends on the configuration of walls and ceilings.
Presets like the one specified in this card can be combined into multifunctional hubs.
Elements of Mute Modular system may change. Availability of finishes and equipment varies by region.

Interested in this unit? Ask for an offer →

Mute © 2026 All rights reserved

Modular | MUTE.

Name	Function	Capacity	Room type	Modular size	Acoustics
Meet 5x4 p8.v1.C	Meet	8 people	Closed	5x4	B

Dimensions

519 x 418 x 238 / 226 cm
204.33 x 164.57 x 93.7 / 88.97 in.

Description

This room for meetups provides space up to 8 people. It's equipped with dedicated furniture and accessories, finished with third-party fit-outs.

It is a part of Modular Meet set – areas in plenty of sizes and capacities to host any gathering: team meet-ups, brainstorms, workshops, small talks, and more.

Colors

Construction

8x	solid wall module
9x	glass wall module
1x	left-hand glass door module
4x	ventilation ceiling module
1x	electric ceiling module
15x	solid ceiling module
2x	power distribution unit
16x	Flask track lighting
√	integrated linear lamp
√	control panel

System furniture and accessories

5x	deep shelf
1x	deep shelf with left bookend
1x	TV hanger - two profile
1x	two-drawer cabinet
3x	single-drawer cabinet
1x	display stand
2x	wall hook
√	curtain rail
√	curtain

Clay Red

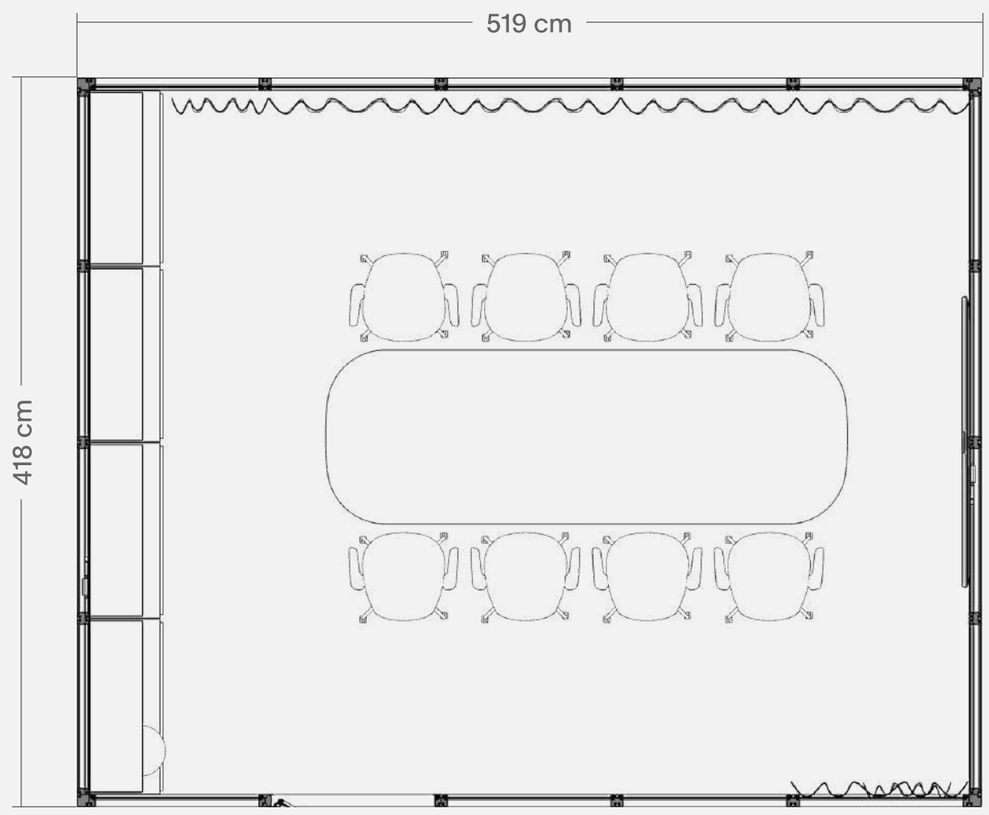

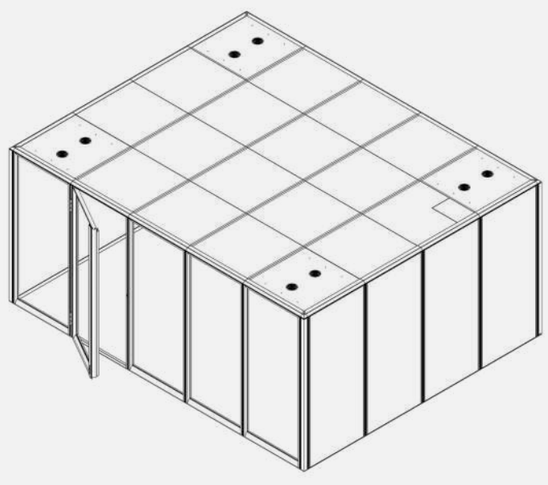

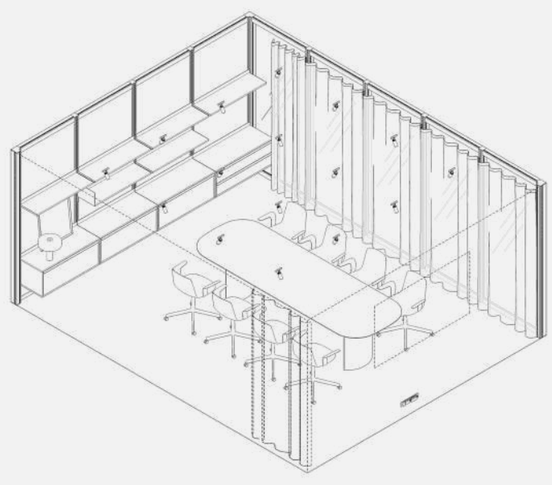

This visualization contains 3rd party products which are purely examplary and are not sold by Mute.
Acoustics acording to ISO 23351-1. Acoustic class depends on the configuration of walls and ceilings.
Presets like the one specified in this card can be combined into multifunctional hubs.
Elements of Mute Modular system may change. Availability of finishes and equipment varies by region.

Interested in this unit? Ask for an offer →

Mute © 2026 All rights reserved

Hubs

Multi-functional units that connect several spaces into one smart system. Hubs are ideal for separating zones and guiding office traffic flows while serving multiple functions at once. They maximize space usage, improve ergonomics, and bring structure and functionality to modern workplaces without sacrificing flexibility.

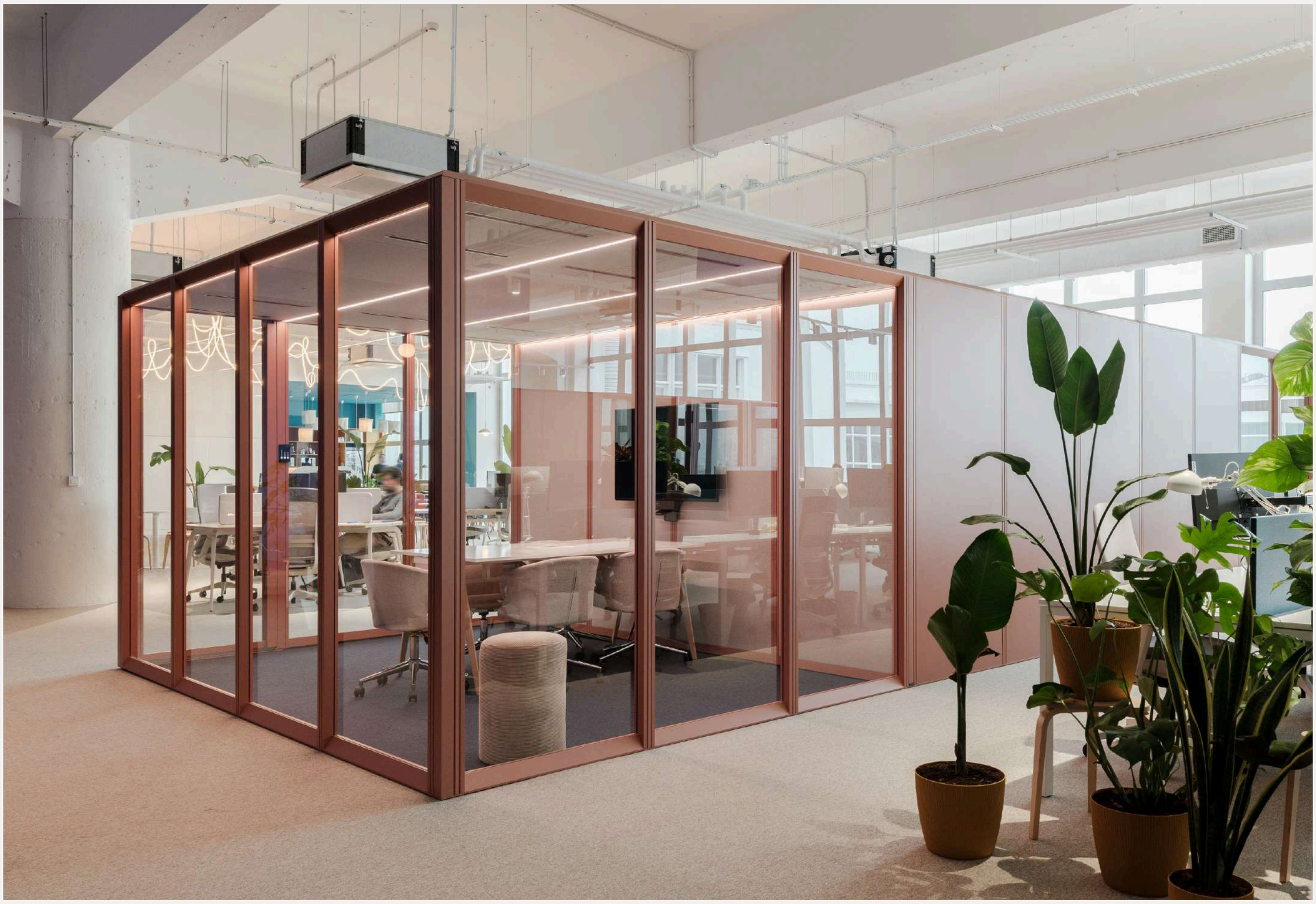

Mute © 2026 All rights reserved

Modular | MUTE.

Name	Functions	Capacity	Modular size
Hub 1	Lounge + Meet + Lounge + Work	2 + 4 + 5 + 2	8x3

Dimensions

843 x 317 x 238 / 226 cm
331.89 x 124.8 x 93.7 / 88.97 in.

Description

The system offers unmatched level of modularity. You can arrange individual rooms or combine them into cross-functional hubs to build the perfect, flexible office that provide space and complexity.

Colors

This hub is available in 24 colors.

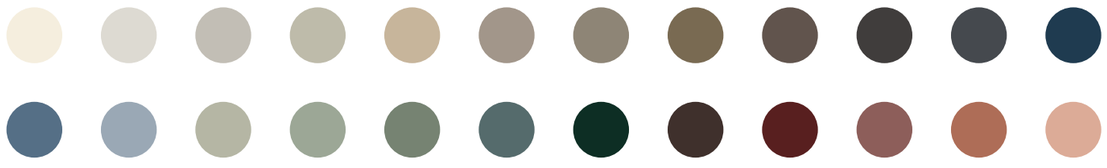

See single rooms of this hub on next pages →

This visualization contains 3rd party products which are examplary and are not sold by Mute.

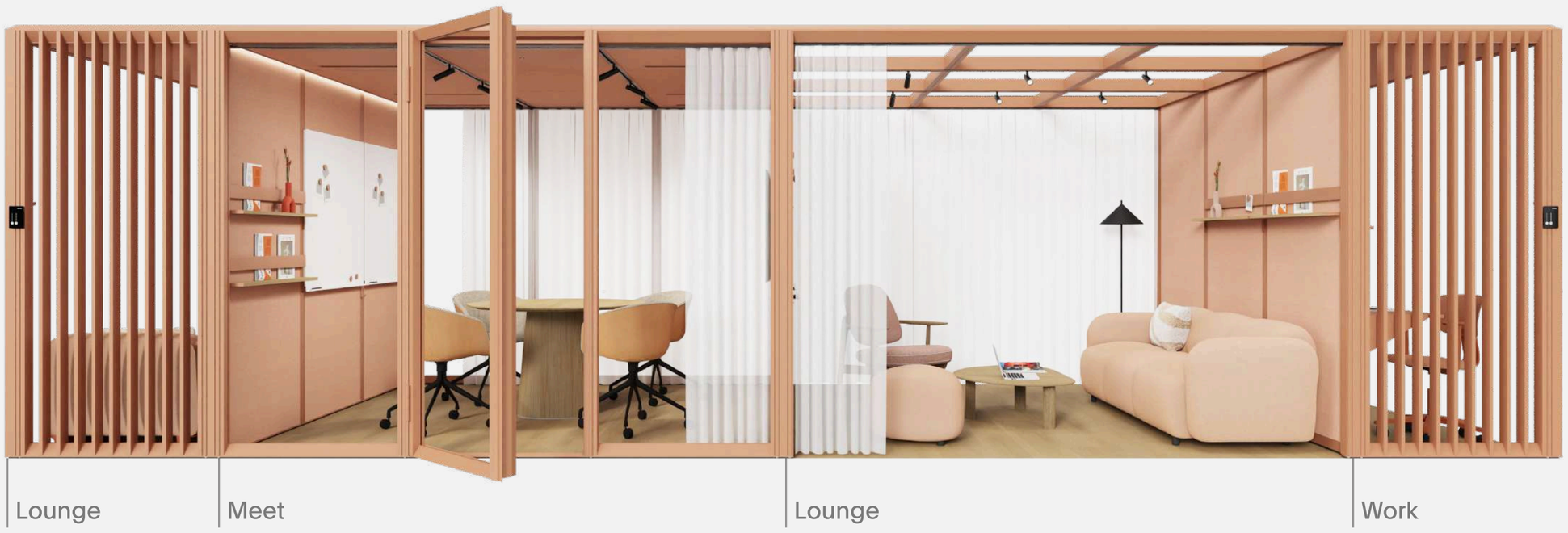

Clay Red

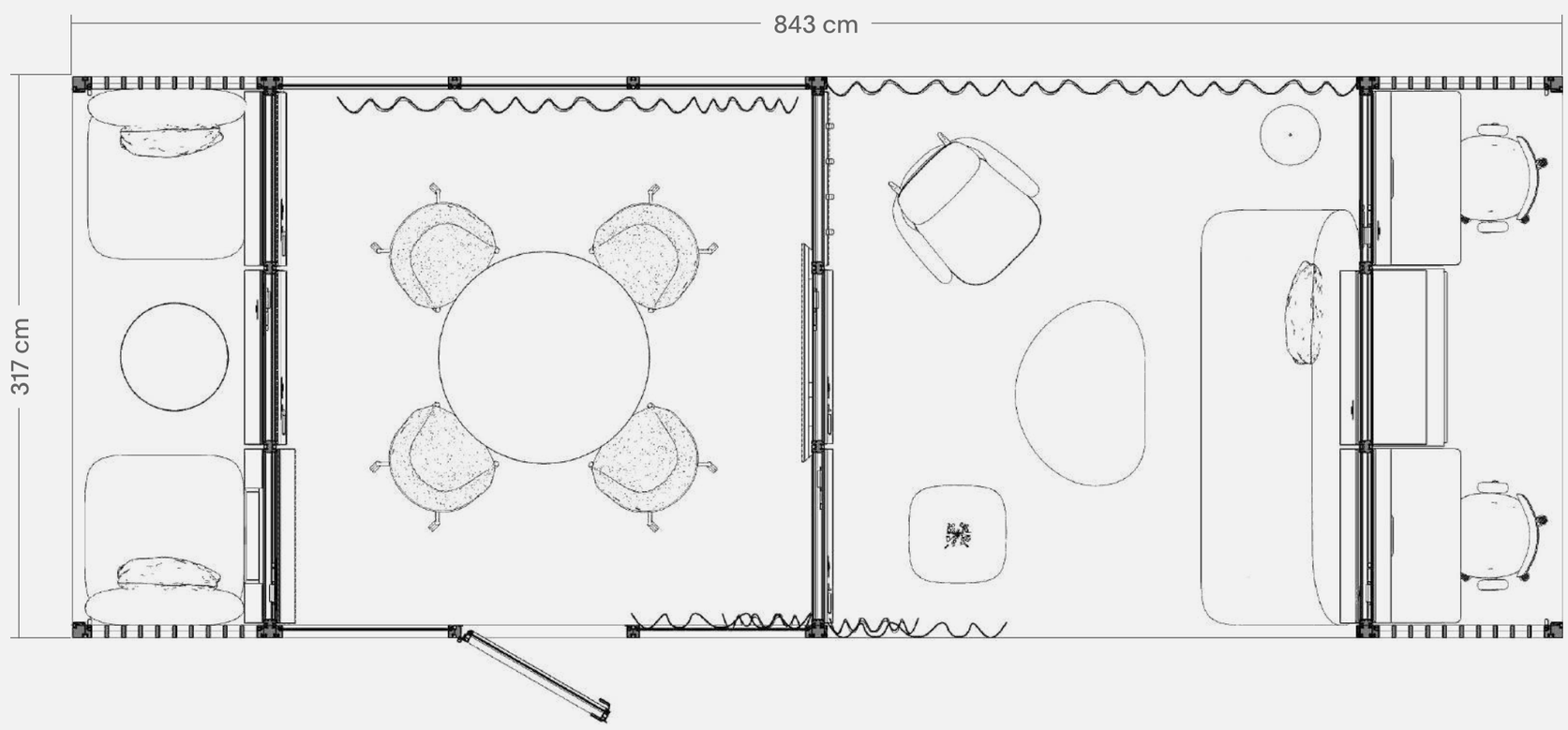

Mute © 2026 All rights reserved

Modular | MUTE.

Name	Function	Capacity	Room type	Modular size
Lounge 3x1 p2.v1.O	Lounge	2 people	Open	3x1

Dimensions

317 x 115 x 238 / 226 cm
124.80 x 45.28 x 93.7 / 88.97 in.

Description

This room for relaxing provide space up to 2 people. It's equipped with dedicated furniture and accessories, finished with third-party fit-outs.

It is a part of Modular Lounge set – cozy areas for less-formal meet-ups and every casual occasion. Perfect for a waiting lounge, chill-out area, or gaming room.

Construction

3x	solid wall module
2x	slated wall module
1x	electric ceiling module
2x	solid ceiling module
1x	power distribution unit
√	control panel
√	integrated linear lamp

System furniture and accessories

3x	shallow shelf
2x	display rail
1x	magnets (2 pcs)
2x	wall hooks
1x	display stand

Clay Red

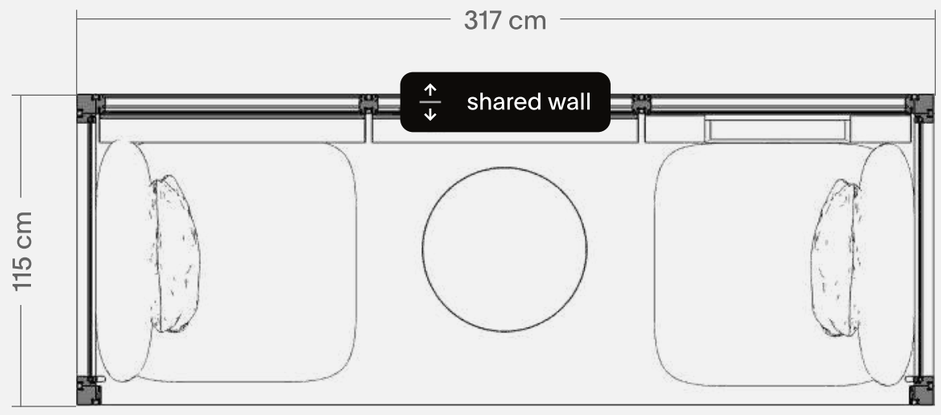

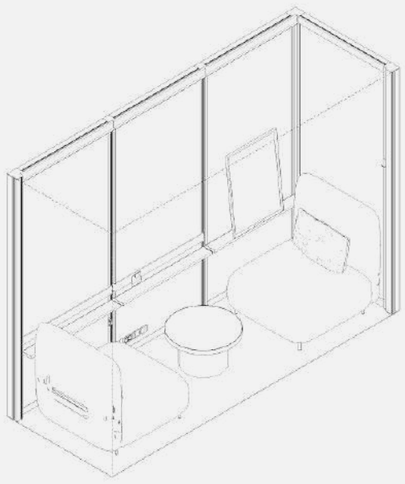

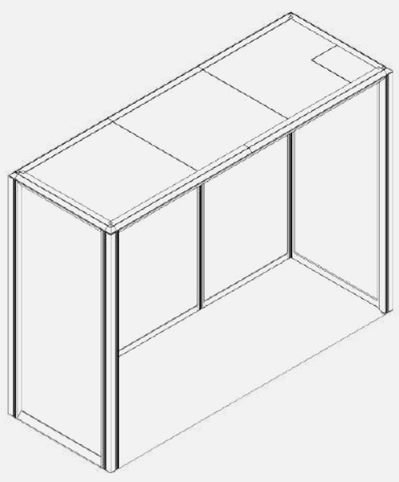

Elements of Mute Modular system may change. Availability of finishes and equipment varies by region.

Interested in this unit? Ask for an offer →

Mute © 2026 All rights reserved

Modular | MUTE.

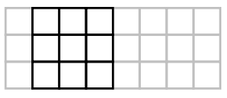

Name	Function	Capacity	Room type	Modular size
Meet 3x3 p4.v2.C	Meet	4 people	Closed	3x3

Dimensions

317 x 317 x 238 / 226 cm
124.80 x 124.80 x 93.7 / 88.97 in.

Description

This room for meetups provide space up to 4 people. It's equipped with dedicated furniture and accessories, finished with third-party fit-outs.

It is a part of Modular Meet set – places in plenty of sizes and capacities to host any gathering: team meet-ups, brainstorms, workshops, small talks, and more.

Construction

6x	solid wall module
5x	glass wall module
1x	left-hand glass door module
4x	ventilation ceiling module
1x	electric ceiling module
5x	solid ceiling module
2x	power distribution unit
2x	Flask track lighting
√	control panel
√	integrated linear lamp

Construction

2x	shallow shelf
1x	TV hanger - two profile
2x	whiteboard
2x	display rail
4x	magnet (2 pcs)
2x	wall hook
√	curtain rail
√	curtain

Clay Red

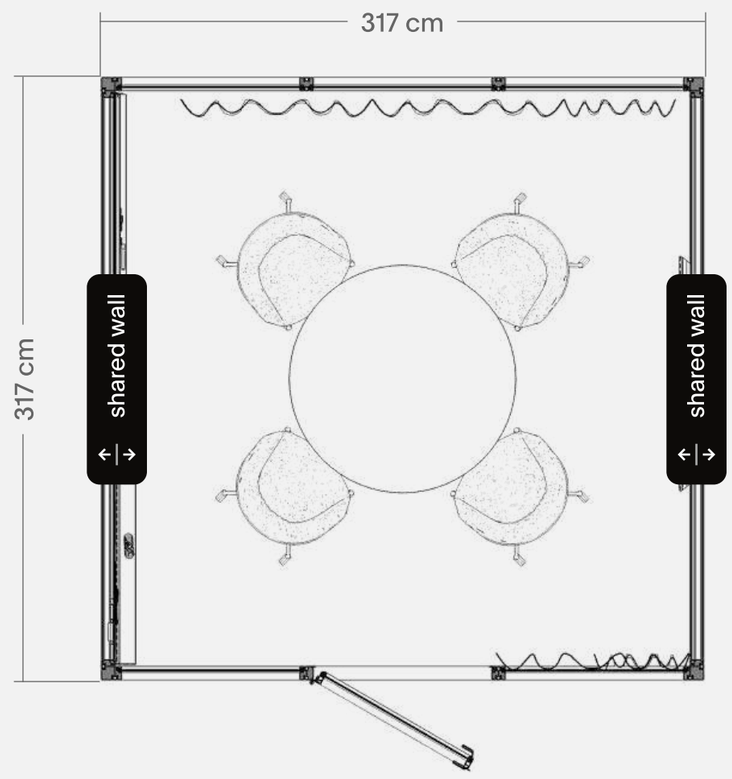

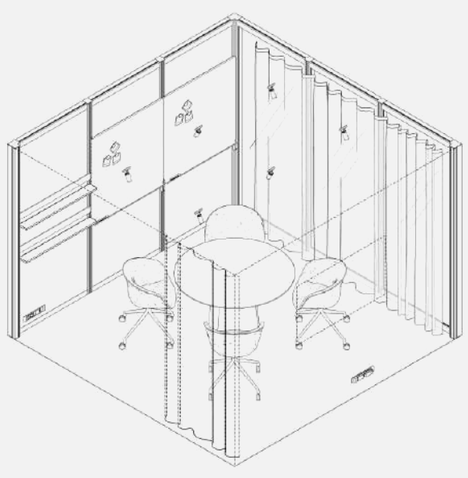

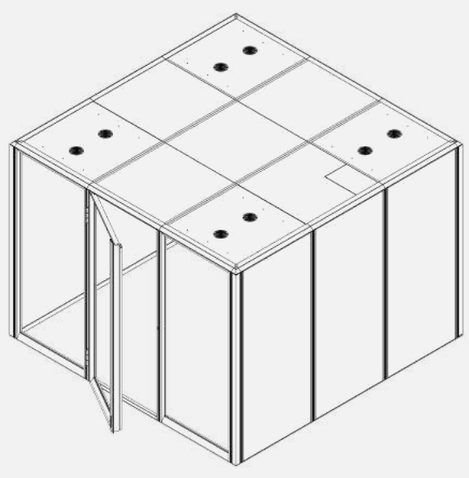

Elements of Mute Modular system may change. Availability of finishes and equipment varies by region.

Interested in this unit? Ask for an offer →

Mute © 2026 All rights reserved

Modular | MUTE.

Name	Function	Capacity	Room type	Modular size
Lounge 3x3 p5.v1.0	Lounge	5 people	Open	3x3

Dimensions

317 x 317 x 238 / 226 cm
124.80 x 124.80 x 93.7 / 88.97 in.

Description

This room for relaxing provide space up to 5 people. It's equipped with dedicated furniture and accessories, finished with third-party fit-outs.

It is a part of Modular Lounge set – cozy areas for less-formal meet-ups and every casual occasion. Perfect for a waiting lounge, chill-out area, or gaming room.

Construction

6x	solid wall module
1x	power distribution unit
6x	Flask track lighting
√	control panel

System furniture and accessories

2x	shallow shelf
2x	whiteboard
3x	display rail
1x	display rail hook (4 pcs)
4x	magnet (2 pcs)
√	curtain rail
√	curtain

Clay Red

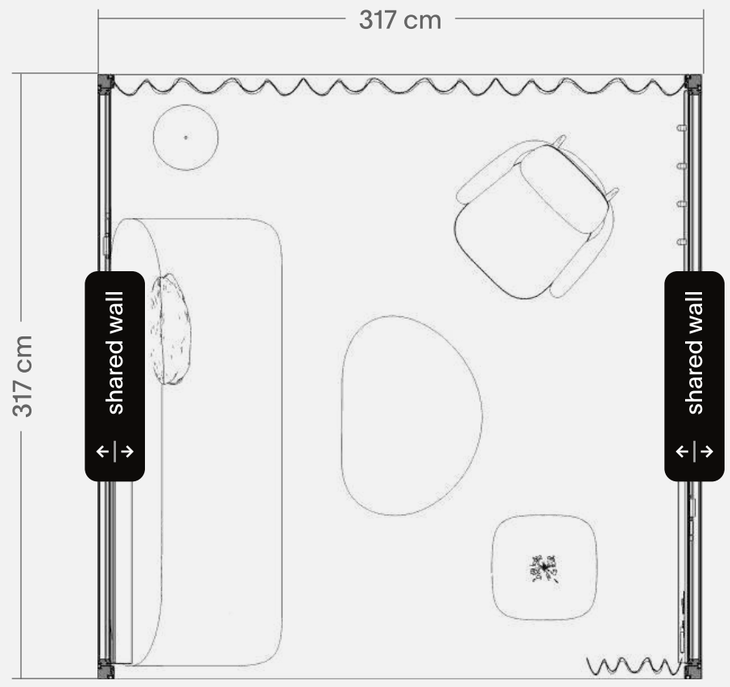

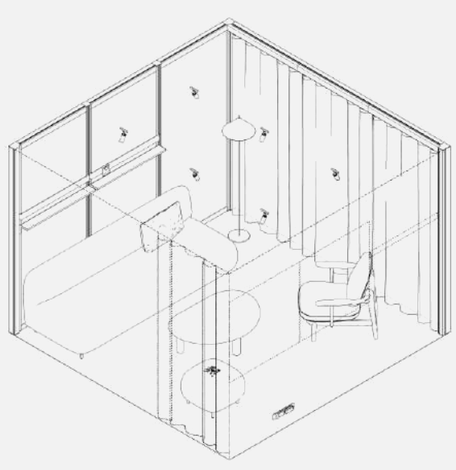

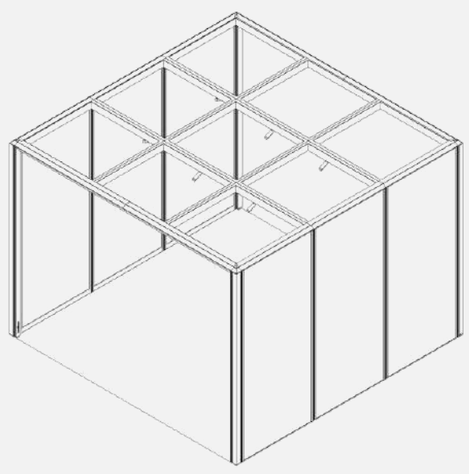

Elements of Mute Modular system may change. Availability of finishes and equipment varies by region.

Interested in this unit? Ask for an offer →

Mute © 2026 All rights reserved

Modular | MUTE.

Name	Function	Capacity	Room type	Modular size
Work 3x1 p2.v1.O	Work	2 people	Open	3x1

Dimensions

317 x 115 x 238 / 226 cm
124.80 x 45.28 x 93.7 / 88.97 in.

Description

This room for relaxing provide space up to 5 people. It's equipped with dedicated furniture and accessories, finished with third-party fit-outs.

It is a part of Modular Lounge set – cozy areas for less-formal meet-ups and every casual occasion. Perfect for a waiting lounge, chill-out area, or gaming room.

Construction

3x	solid wall module
2x	slated wall module
1x	electric ceiling module
2x	solid ceiling module
2x	power distribution unit
√	control panel
√	integrated linear lamp

System furniture and accessories

2x	shallow shelf
1x	deep shelf with bookends
1x	two-drawer cabinet
2x	desk
2x	display rail
1x	magnet (2 pcs)
2x	wall hook

Clay Red

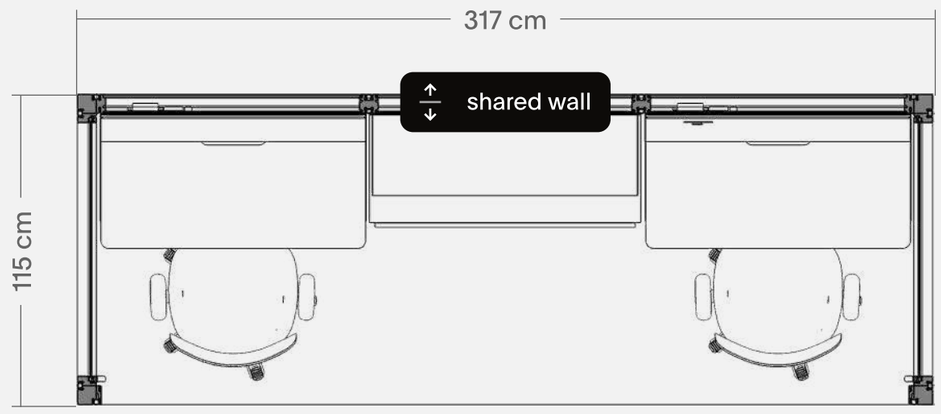

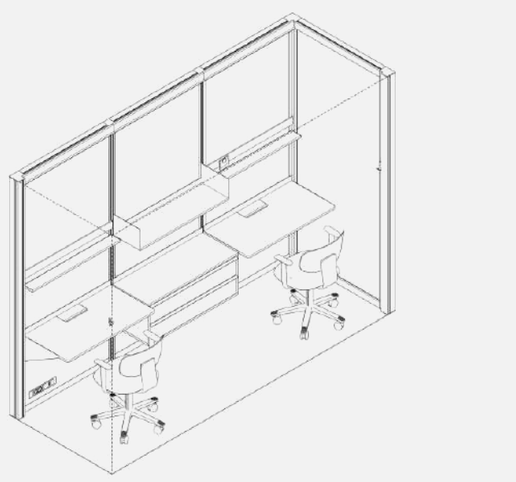

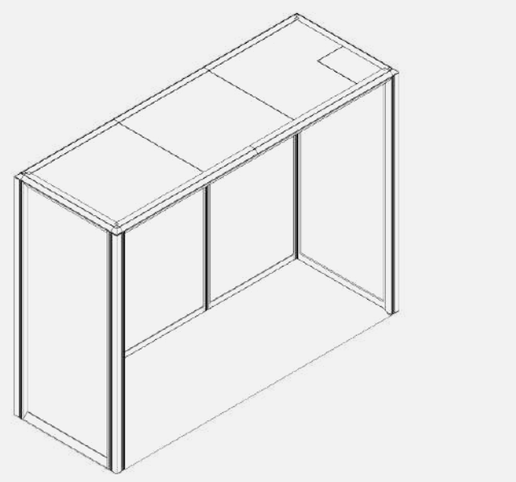

Elements of Mute Modular system may change. Availability of finishes and equipment varies by region.

Interested in this unit? Ask for an offer →

Mute © 2026 All rights reserved

Modular | MUTE.

Name	Functions	Capacity	Modular size
Hub 2	Support + Meet + Work	X + 4 + 2	4,5x3

Dimensions

482,5 x 317 x 238 / 226 cm
189.96 x 124.8 x 93.7 / 88.97 in.

Description

The system offers unmatched level of modularity. You can arrange individual rooms or combine them into cross-functional hubs to build the perfect, flexible office that provide space and complexity.

Colors

This hub is available in 24 colors.

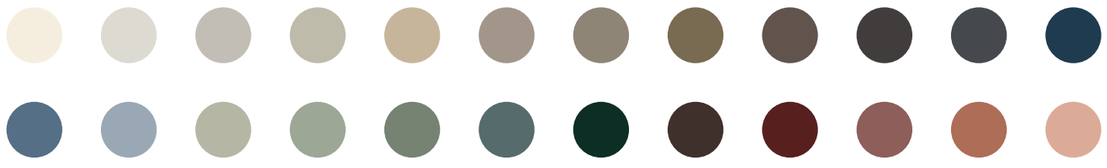

See single rooms of this hub on next pages →

This visualization contains 3rd party products which are examplary and are not sold by Mute.

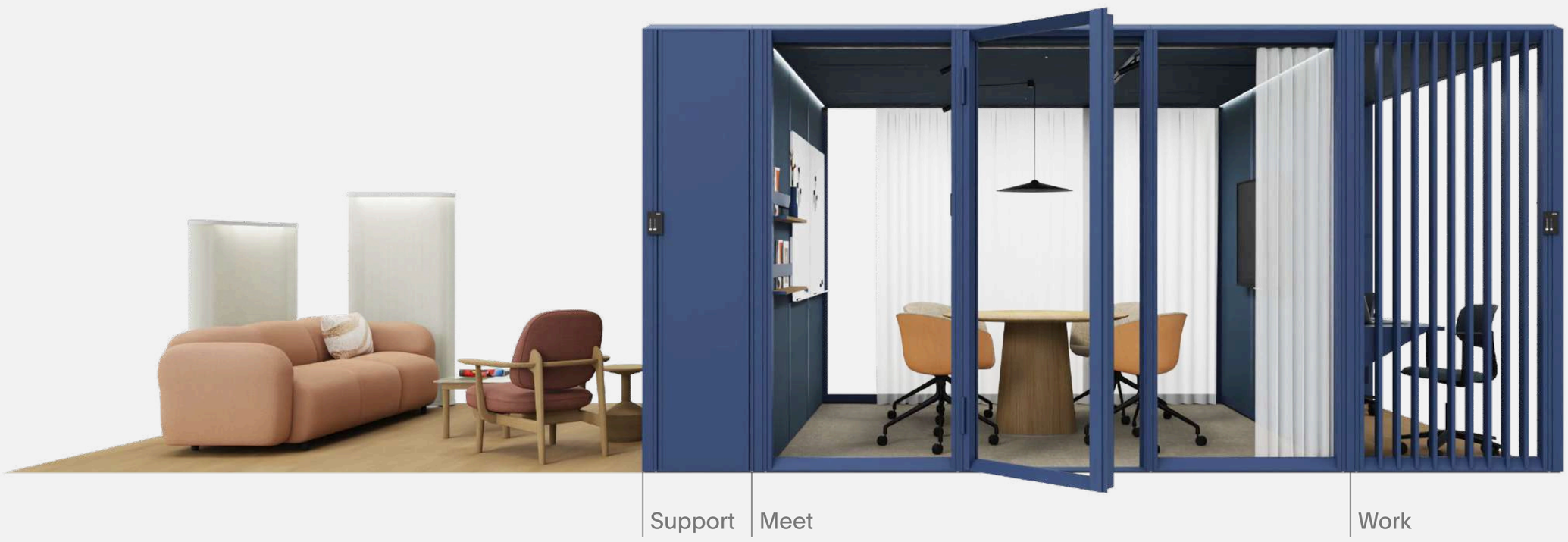

Ink Blue

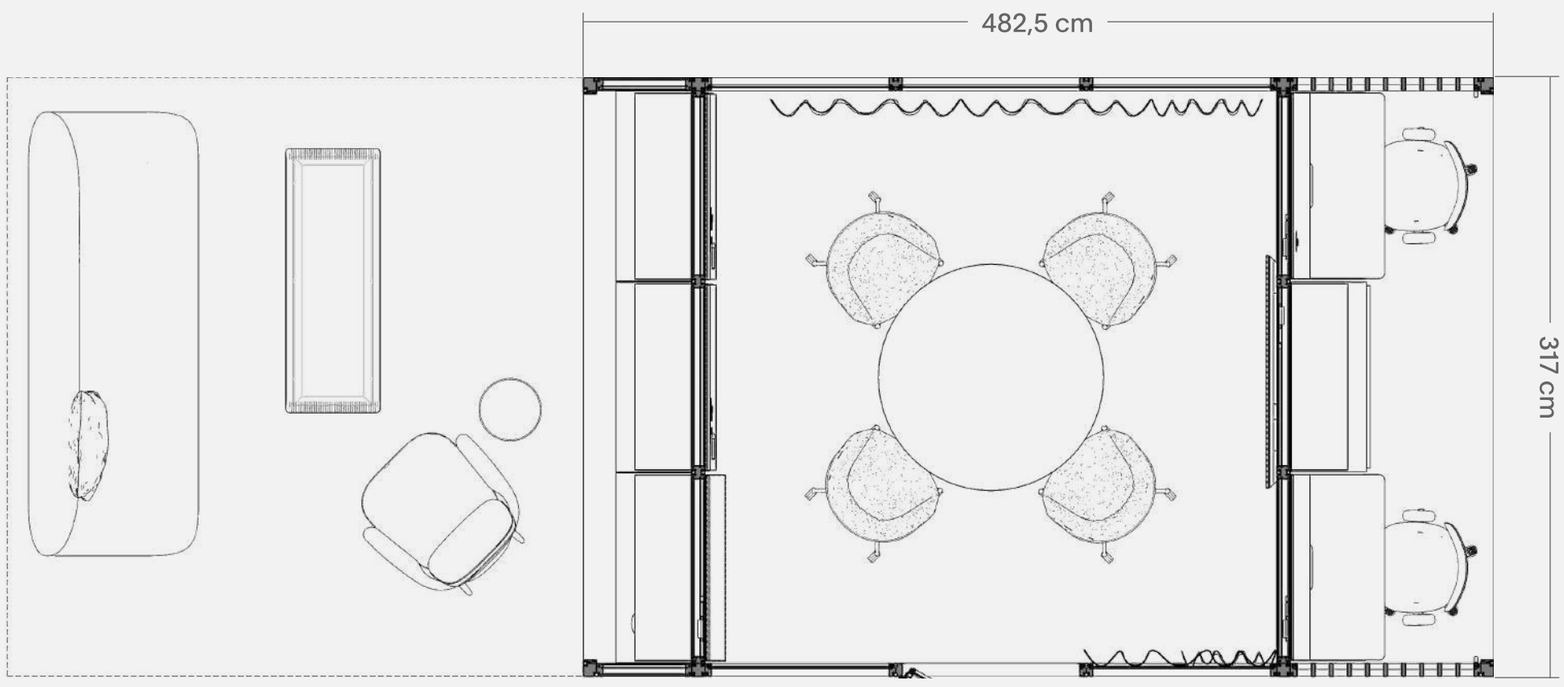

Mute © 2026 All rights reserved

Modular | MUTE.

Name	Function	Capacity	Room type	Modular size
Support 3x0,5 v2.O	Support	x	Open	3x0,5

Dimensions

317 x 64,5 x 238 / 226 cm
124.80 x 25.39 x 93.7 / 88.97 in.

Description

This room for facilitating office work provide space and functionality. It's equipped with dedicated furniture and accessories, finished with third-party fit-outs.

It is a part of Modular Support, set – multi-functional areas created for back-office functions such as storage, cloakroom, coffee corner, or copy point.

Construction

3x	solid wall module
2x	solid wall module
1x	electric ceiling module
2x	solid ceiling module
1x	power distribution unit
√	control panel
√	integrated linear lamp

System furniture and accessories

4x	deep shelf
1x	open shelf cabinet
2x	sliding door cabinet
1x	deep shelf with left bookend
1x	display stand

Ink Blue

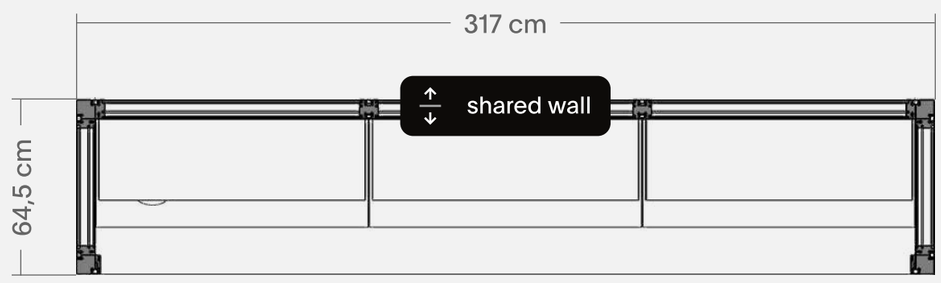

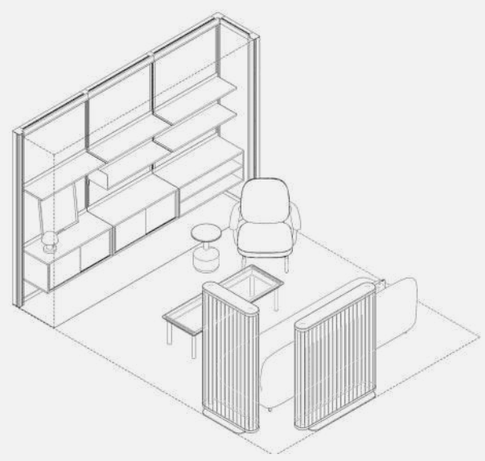

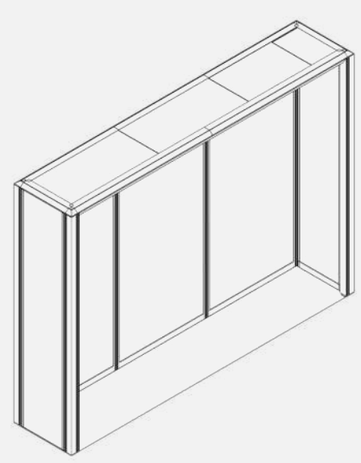

Elements of Mute Modular system may change. Availability of finishes and equipment varies by region.

Interested in this unit? Ask for an offer →

Mute © 2026 All rights reserved

Name	Function	Capacity	Room type	Modular size
Meet 3x3 p4.v2.C	Meet	4 people	Closed	3x3

Dimensions

317 x 317 x 238 / 226 cm
124.80 x 124.80 x 93.7 / 88.97 in.

Description

This room for meetups provide space up to 4 people. It's equipped with dedicated furniture and accessories, finished with third-party fit-outs.

It is a part of Modular Meet set – places in plenty of sizes and capacities to host any gathering: team meet-ups, brainstorms, workshops, small talks, and more.

Construction

6x	solid wall module
5x	glass wall module
1x	left-hand glass door
4x	ventilation ceiling module
1x	electric ceiling module
4x	solid ceiling module
2x	power distribution unit
6x	Flask track lighting
1x	Mika track lighting
√	control panel
√	integrated linear lamp

System furniture and accessories

2x	shallow shelf
2x	TV hanger - two profile
2x	whiteboard
2x	display rail
4x	magnets (2 pcs)
2x	wall hook
√	curtain rail
√	curtain

Ink Blue

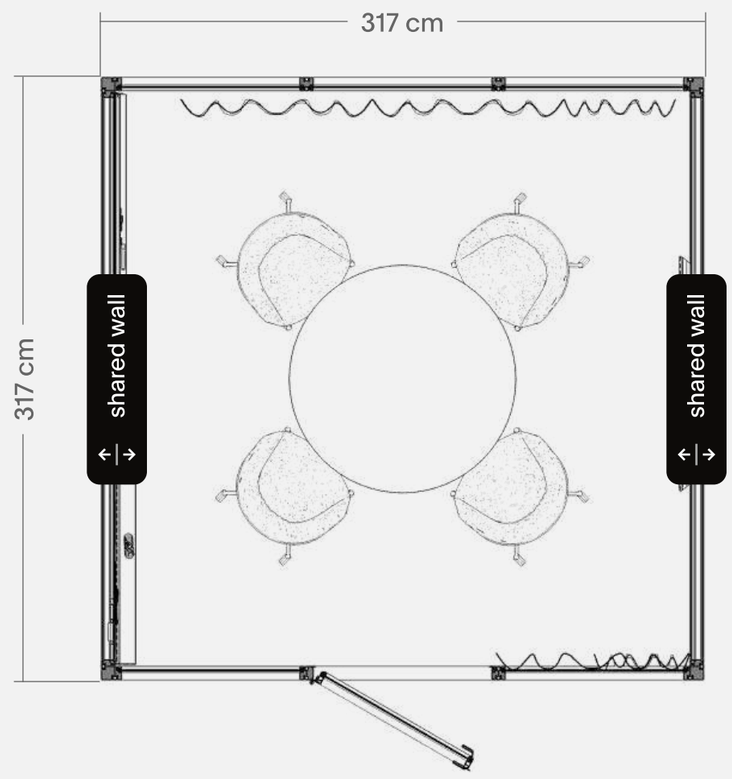

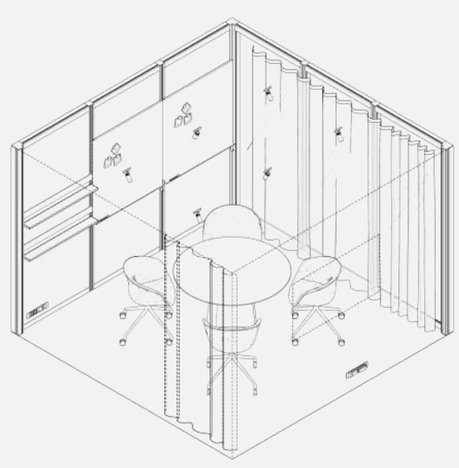

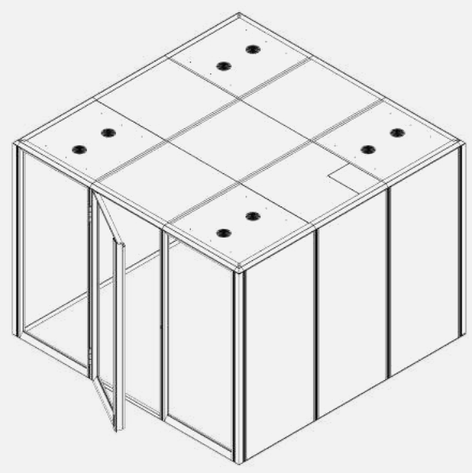

Elements of Mute Modular system may change. Availability of finishes and equipment varies by region.

Interested in this unit? Ask for an offer →

Mute © 2026 All rights reserved

Name	Function	Capacity	Room type	Modular size
Work 3x1 p2.v1.O	Work	2 people	Open	3x1

Dimensions

317 x 115 x 238 / 226 cm
124.80 x 45.28 x 93.7 / 88.97 in.

Description

This room for collaborative work provide space and calm for two people. It's equipped with dedicated furniture and accessories, finished with third-party fit-outs.

It is a part of Modular Work set – areas designed purposefully to offer comfort and privacy for the individual, focused work, or small collaborative sessions.

Construction

3x	solid wall module
2x	slated wall module
1x	electric ceiling module
2x	solid ceiling module
2x	power distribution unit
√	control panel
√	integrated linear lamp

System furniture and accessories

2x	shallow shelf
1x	deep shelf with bookends
1x	two-drawer cabinet
2x	desk 100
2x	display rail
1x	magnet (2 pcs)
2x	wall hook

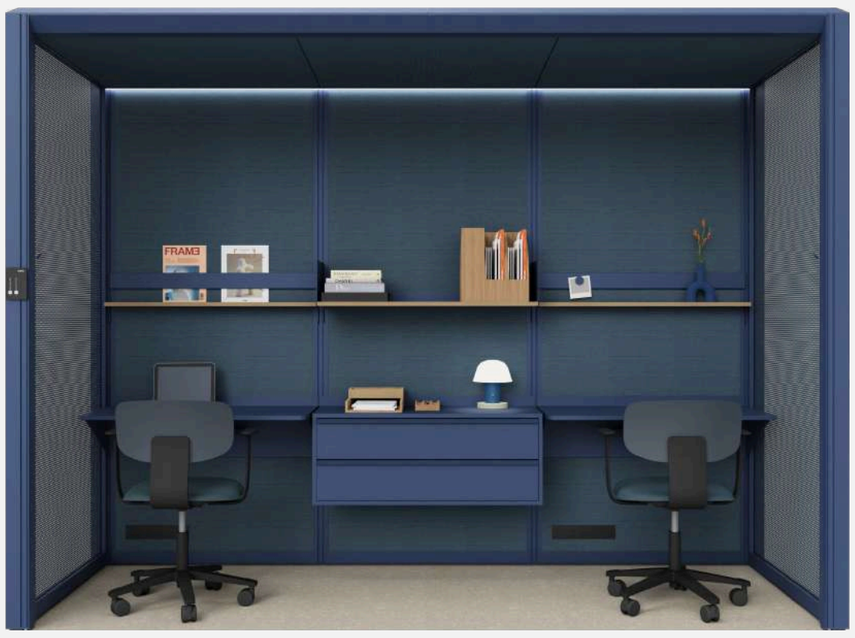

Ink Blue

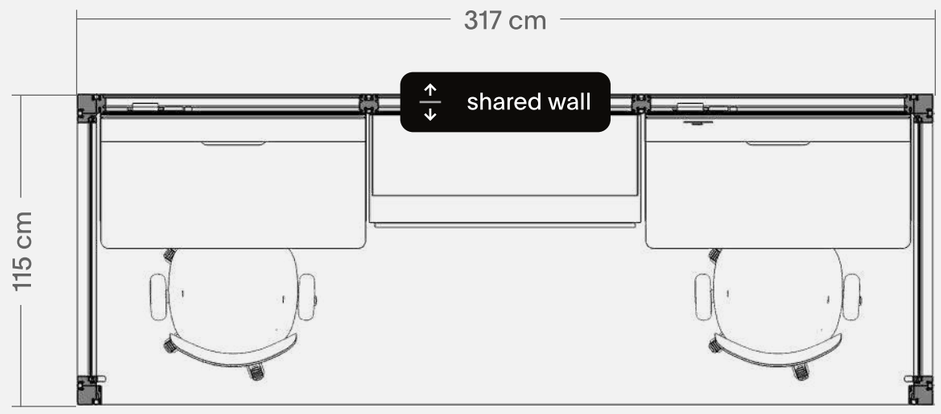

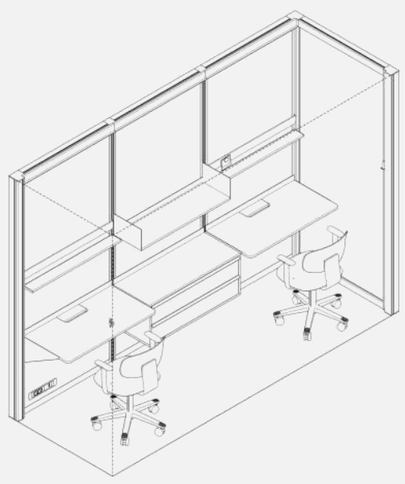

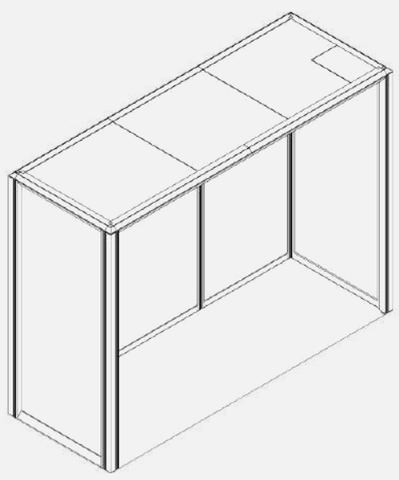

Elements of Mute Modular system may change. Availability of finishes and equipment varies by region.

Interested in this unit? Ask for an offer →

Mute © 2026 All rights reserved

Modular | MUTE.

Name	Functions	Capacity	Modular size
Hub 3	Work + Meet + Lounge	2 + 3 + 2	5x3

Dimensions

533 x 317 x 238 / 226 cm
209.84 x 124.8 x 93.7 / 88.97 in.

Description

The system offers unmatched level of modularity. You can arrange individual rooms or combine them into cross-functional hubs to build the perfect, flexible office that provide space and complexity.

Colors

This hub is available in 24 colors.

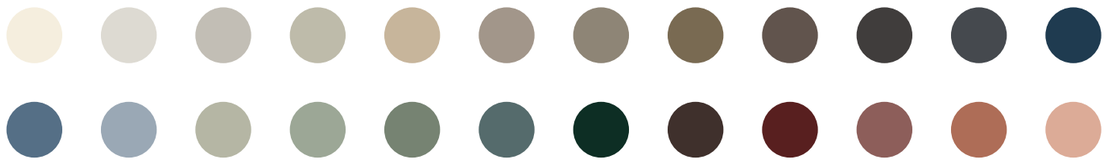

See single rooms of this hub on next pages →

This visualization contains 3rd party products which are examplary and are not sold by Mute.

Ash Gray

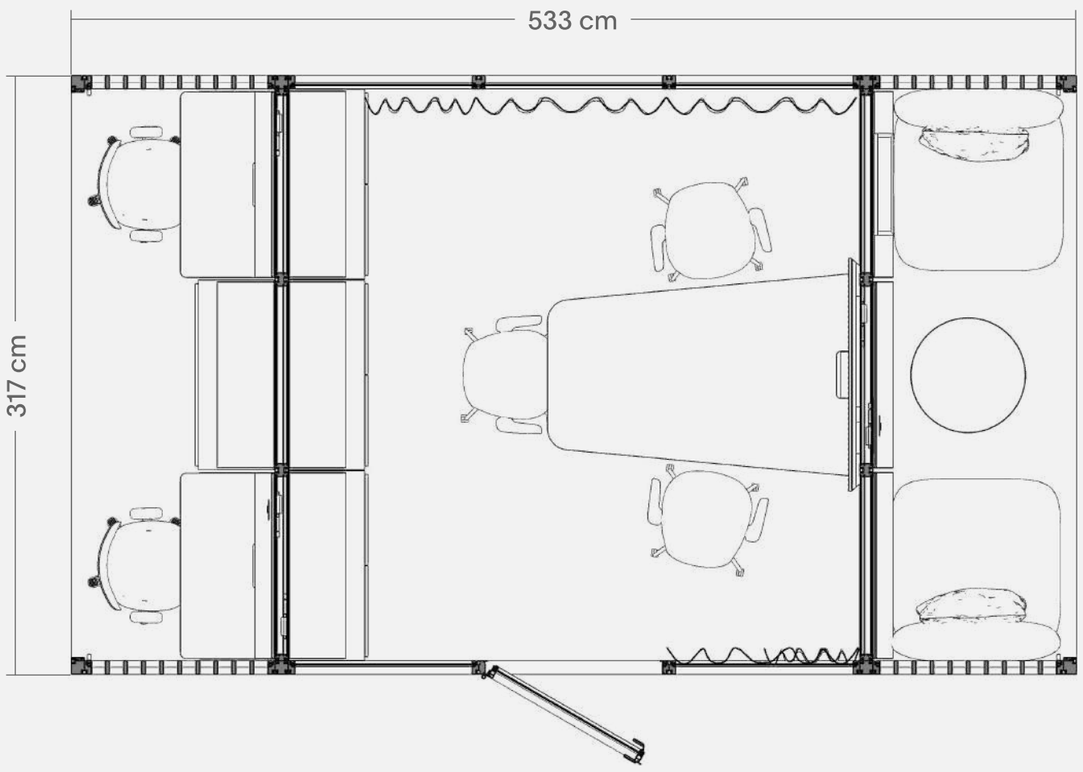

Mute © 2026 All rights reserved

Name	Function	Capacity	Room type	Modular size
Work 3x1 p2.v1.O	Work	2 people	Open	3x1

Dimensions

317 x 115 x 238 / 226 cm
124.80 x 45.28 x 93.7 / 88.97 in.

Description

This room for collaborative work provide space and calm for two people. It's equipped with dedicated furniture and accessories, finished with third-party fit-outs.

It is a part of Modular Work set – areas designed purposefully to offer comfort and privacy for the individual, focused work, or small collaborative sessions.

Construction

3x	solid wall module
2x	perforated metal wall module
1x	electric ceiling module
2x	solid ceiling module
2x	power distribution unit
√	control panel
√	integrated linear lamp

System furniture and accessories

2x	shallow shelf
1x	deep shelf with bookends
1x	two-drawer cabinet
2x	desk 100
2x	display rail
1x	magnet (2 pcs)
2x	wall hook

Ash Gray

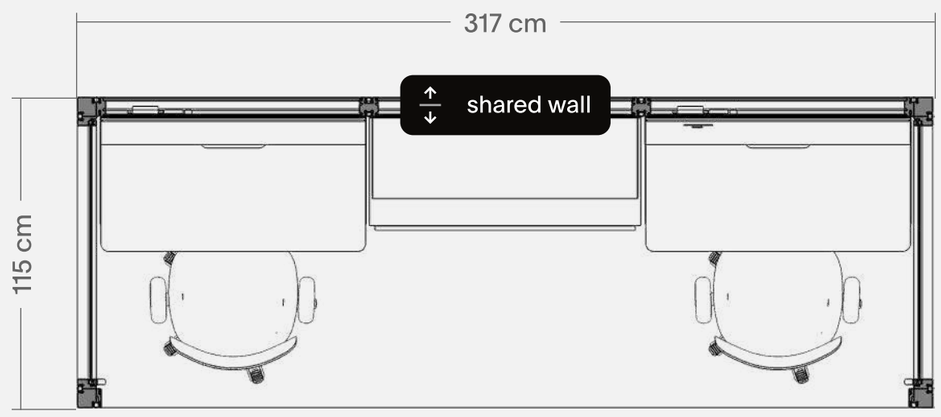

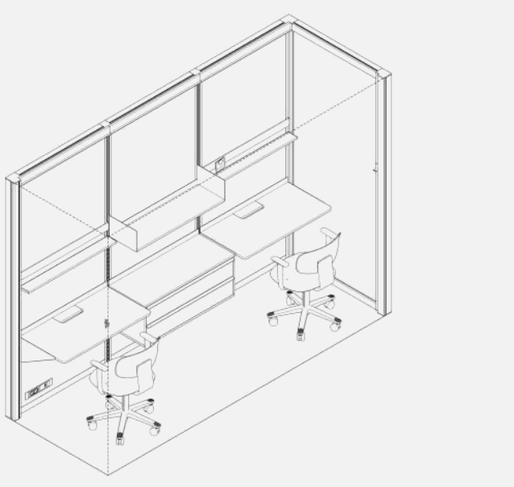

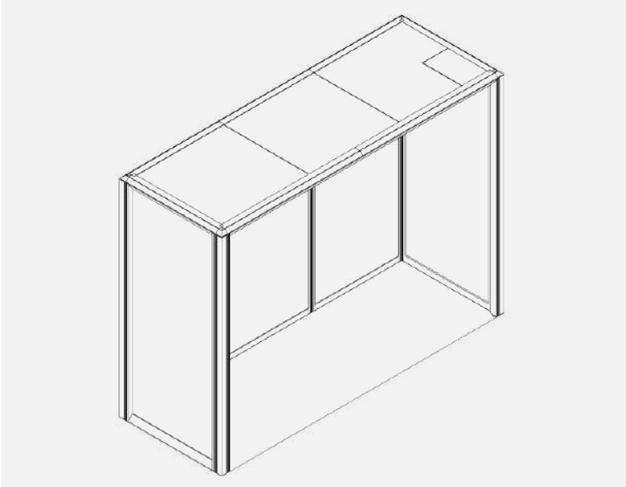

Elements of Mute Modular system may change. Availability of finishes and equipment varies by region.

Interested in this unit? Ask for an offer →

Mute © 2026 All rights reserved

Name	Function	Capacity	Room type	Modular size
Meet 3x3 p3.v1.C	Meet	3 people	Closed	3x3

Dimensions

317 x 317 x 238 / 226 cm
124.80 x 124.80 x 93.7 / 88.97 in.

Description

This room for meetups provide space up to 3 people. It's equipped with dedicated furniture and accessories, finished with third-party fit-outs.

It is a part of Modular Meet set – places in plenty of sizes and capacities to host any gathering: team meet-ups, brainstorms, workshops, small talks, and more.

Construction

6x	solid wall module
5x	glass wall module
1x	left-hand glass door
4x	ventilation ceiling module
1x	electric ceiling module
4x	solid ceiling module
2x	power distribution unit
6x	Flask track lighting
√	control panel
√	integrated linear lamp

System furniture and accessories

1x	table W101xL165
1x	TV hanger - two profile
4x	deep shelf
1x	deep shelf with right bookend
3x	hinged door cabinet
2x	wall hook
1x	display stand
√	curtain rail
√	curtain

Ash Gray

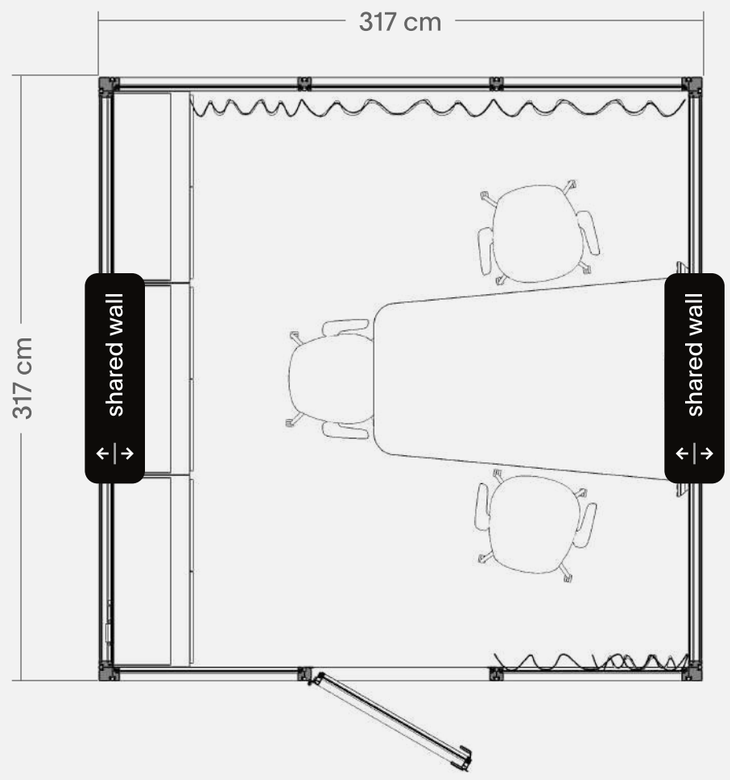

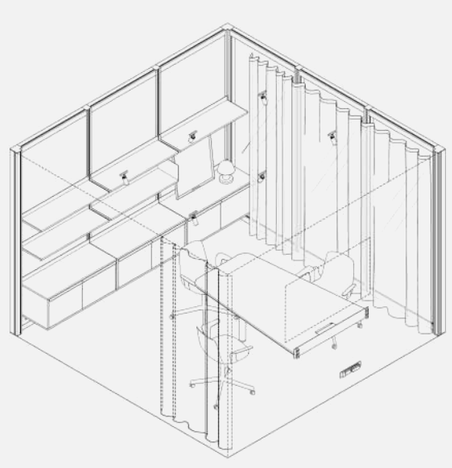

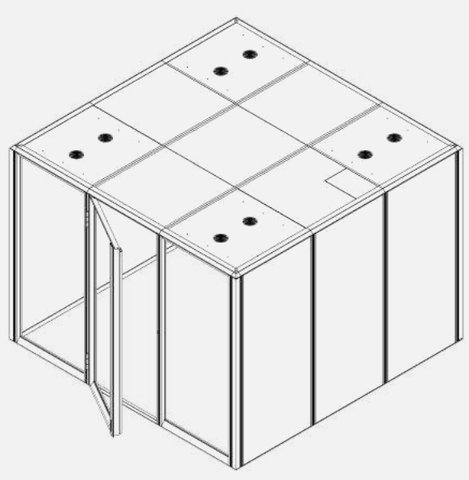

Elements of Mute Modular system may change. Availability of finishes and equipment varies by region.

Interested in this unit? Ask for an offer →

Mute © 2026 All rights reserved

Name	Function	Capacity	Room type	Modular size
Lounge 3x1 p2.v1.O	Lounge	2 people	Open	3x1

Dimensions

317 x 115 x 238 / 226 cm
124.80 x 45.28 x 93.7 / 88.97 in.

Description

This room for relaxing provide space up to 2 people. It's equipped with dedicated furniture and accessories, finished with third-party fit-outs.

It is a part of Modular Lounge set – cozy areas for less-formal meet-ups and every casual occasion. Perfect for a waiting lounge, chill-out area, or gaming room.

Construction

3x	solid wall module
2x	perforated metal wall module
1x	electric ceiling module
2x	solid ceiling module
1x	power distribution unit
√	control panel
√	integrated linear lamp

System furniture and accessories

3x	shallow shelf
2x	display rail
1x	magnet (2 pcs)
2x	wall hook
1x	display stand

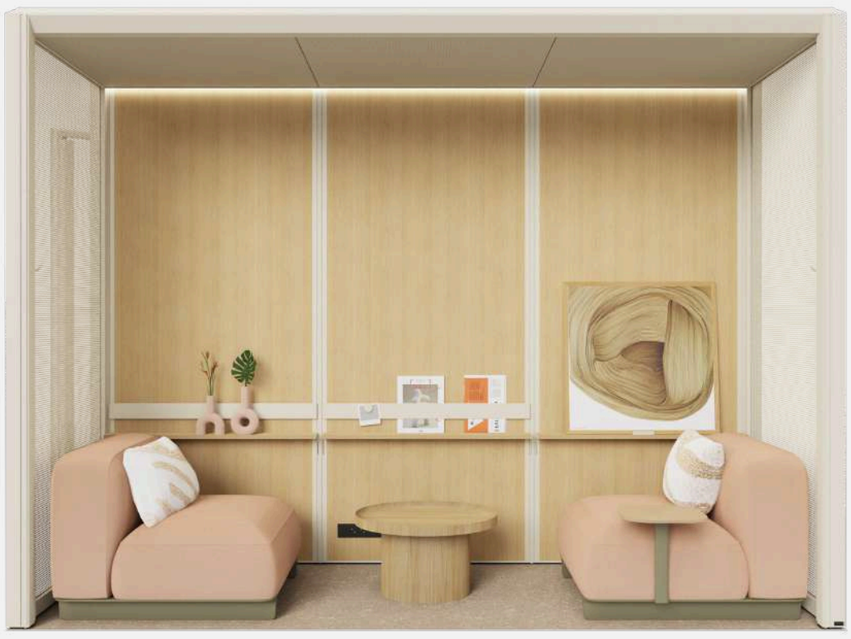

Ash Gray

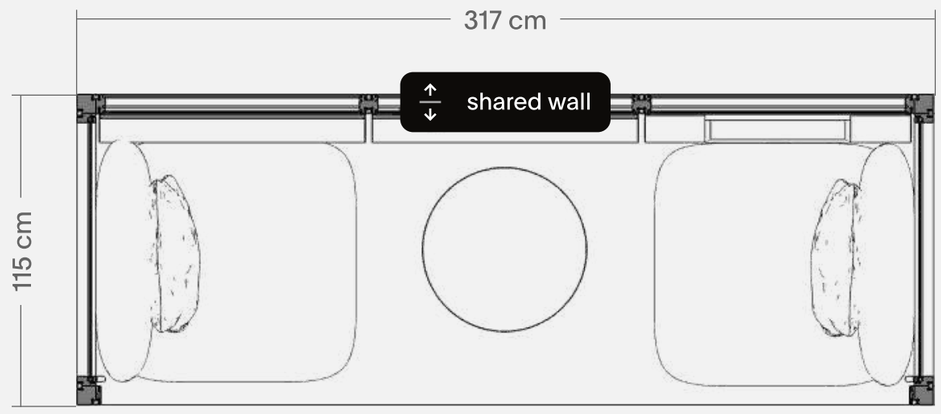

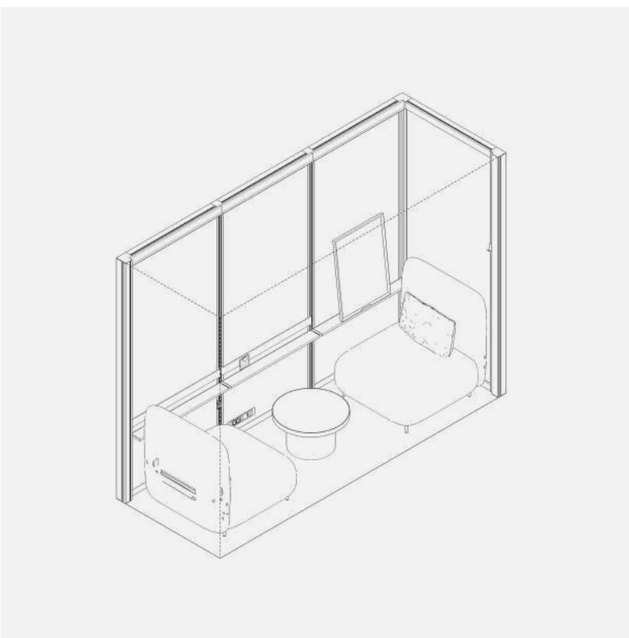

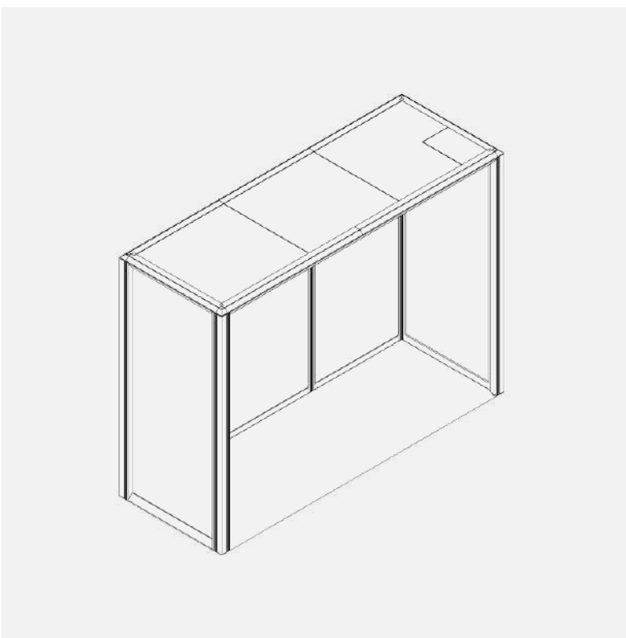

Elements of Mute Modular system may change. Availability of finishes and equipment varies by region.

Interested in this unit? Ask for an offer →

Mute © 2026 All rights reserved

Modular | MUTE.

Name	Functions	Capacity	Modular size
Hub 4	Lounge + Work + Support	2 + 4 + X	5x3

Dimensions

533 x 317 x 238 / 226 cm
209.84 x 124.8 x 93.7 / 88.97 in.

Description

The system offers unmatched level of modularity. You can arrange individual rooms or combine them into cross-functional hubs to build the perfect, flexible office that provide space and complexity.

Colors

This hub is available in 24 colors.

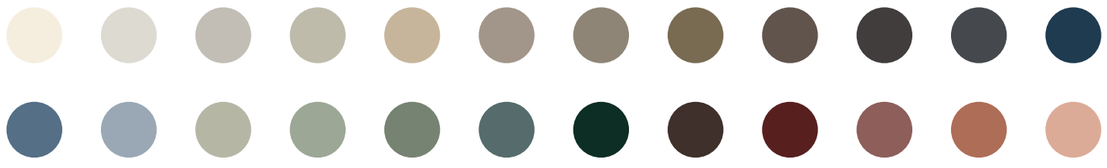

See single rooms of this hub on next pages →

This visualization contains 3rd party products which are examplary and are not sold by Mute.

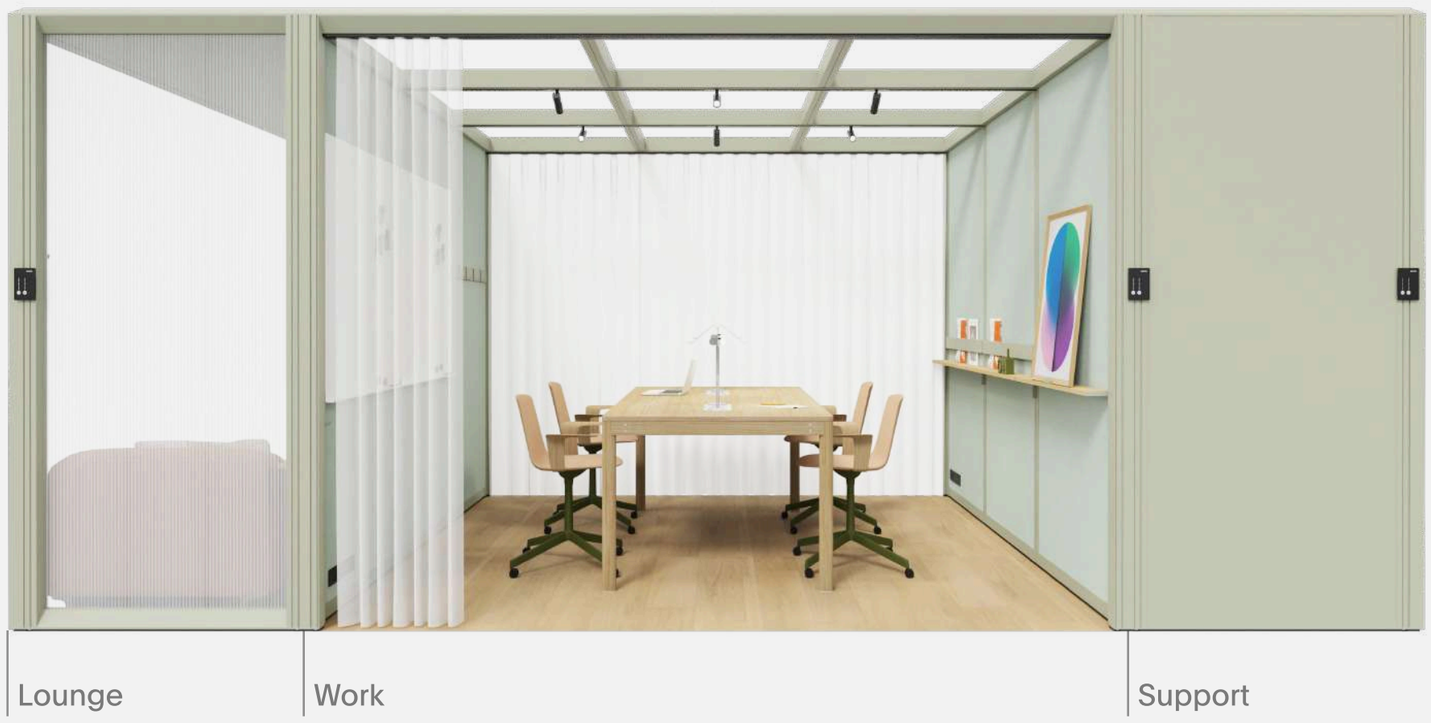

Sage Green

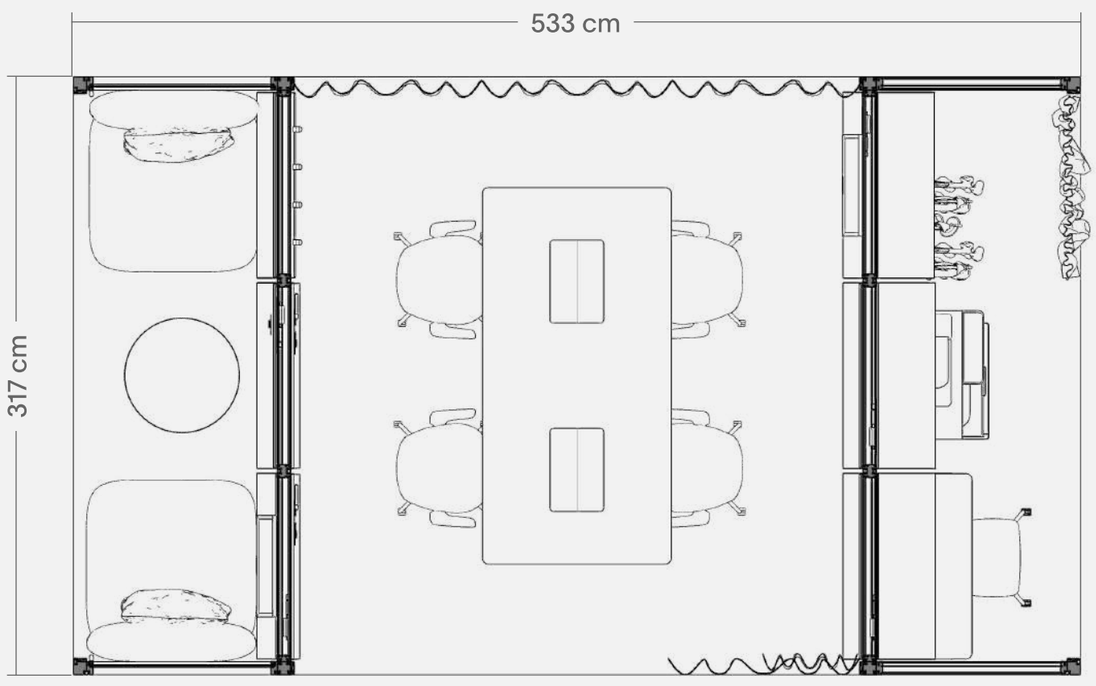

Mute © 2026 All rights reserved

Name	Function	Capacity	Room type	Modular size
Lounge 3x1 p2.v1.O	Lounge	2 people	Open	3x1

Dimensions

317 x 115 x 238 / 226 cm
124.80 x 45.28 x 93.7 / 88.97 in.

Description

This room for relaxing provide space up to 2 people. It's equipped with dedicated furniture and accessories, finished with third-party fit-outs.

It is a part of Modular Lounge set – cozy areas for less-formal meet-ups and every casual occasion. Perfect for a waiting lounge, chill-out area, or gaming room.

Construction

3x	solid wall module
2x	fluted glass wall module
1x	electric ceiling module
2x	solid ceiling module
1x	power distribution unit
√	control panel
√	integrated linear lamp

System furniture and accessories

3x	shallow shelf
2x	display rail
1x	magnet (2 pcs)
2x	wall hook
1x	display stand

Sage Green

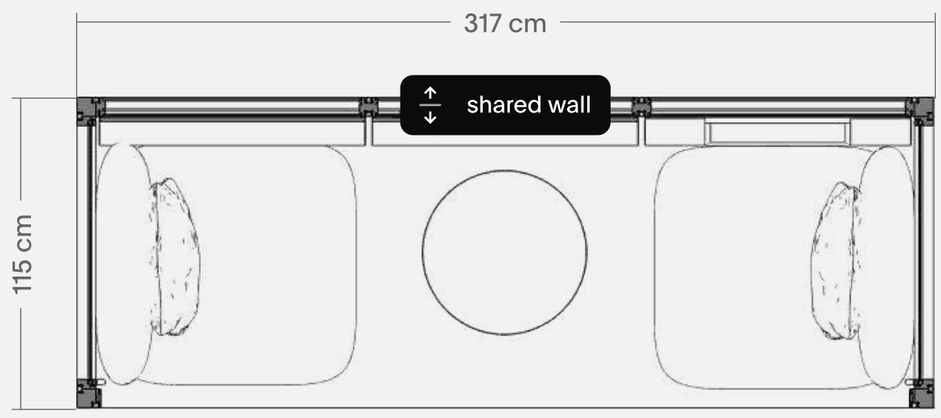

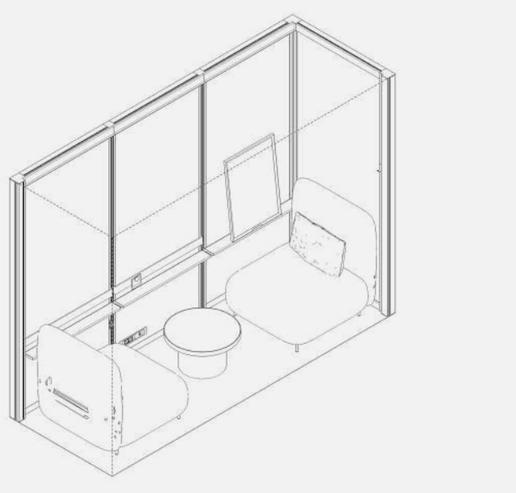

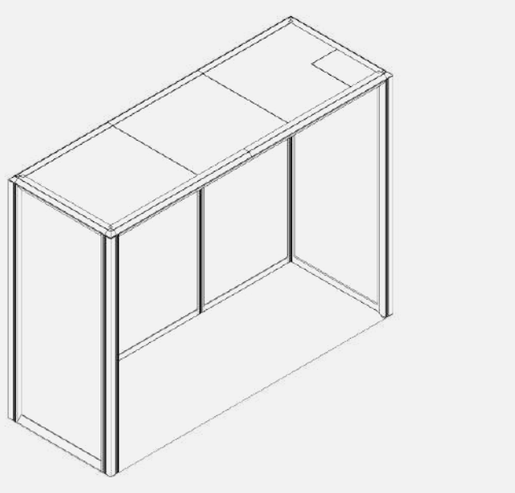

Elements of Mute Modular system may change. Availability of finishes and equipment varies by region.

Interested in this unit? Ask for an offer →

Mute © 2026 All rights reserved

Modular | MUTE.

Name	Function	Capacity	Room type	Modular size
Work 3x3 p4.v2.O	Work	4 people	Open	3x3

Dimensions

317 x 317 x 238 / 226 cm
124.80 x 124.80 x 93.7 / 88.97 in.

Description

This room for collaborative work provide space and calm for four people. It's equipped with dedicated furniture and accessories, finished with third-party fit-outs.

It is a part of Modular Work set – areas designed purposefully to offer comfort and privacy for the individual, focused work, or small collaborative sessions.

Construction

6x	solid wall module
2x	power distribution unit
6x	Flask track lighting
√	control panel
√	integrated linear lamp

System furniture and accessories

3x	shallow shelf
2x	whiteboard
3x	display rail
1x	display rail hook (4 pcs)
4x	magnet (2 pcs)
2x	wall hook
√	curtain rail
√	curtain

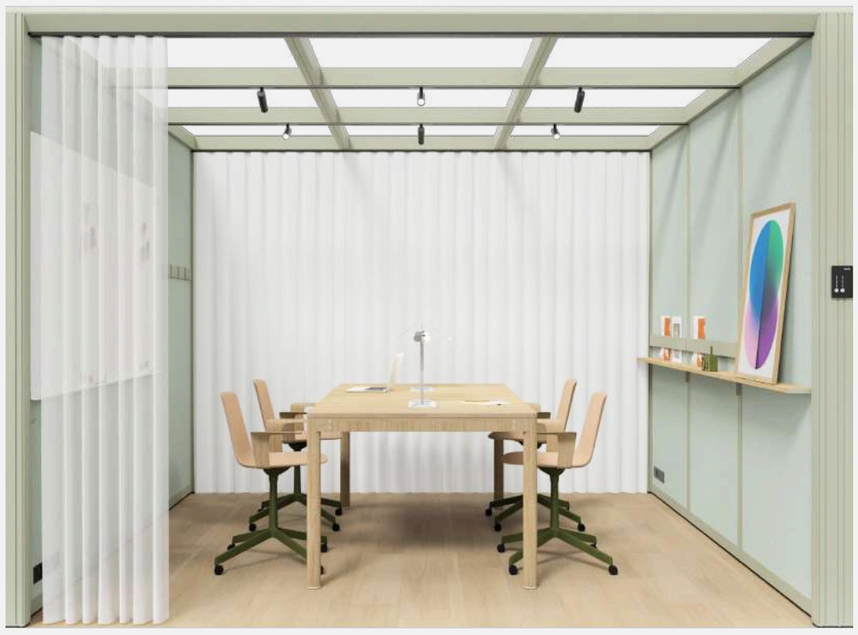

Sage Green

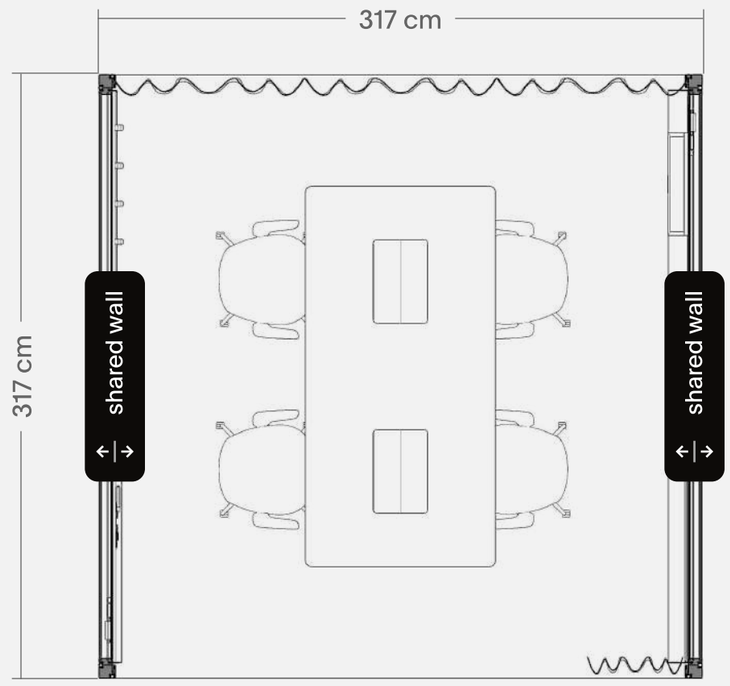

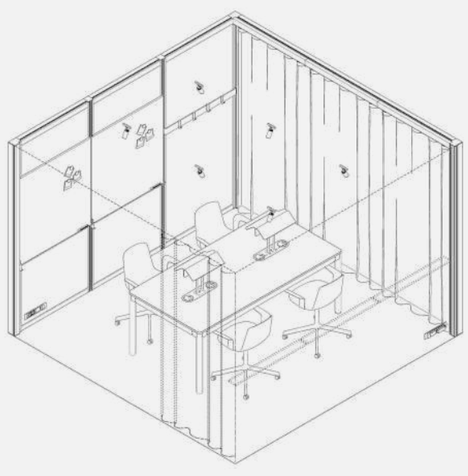

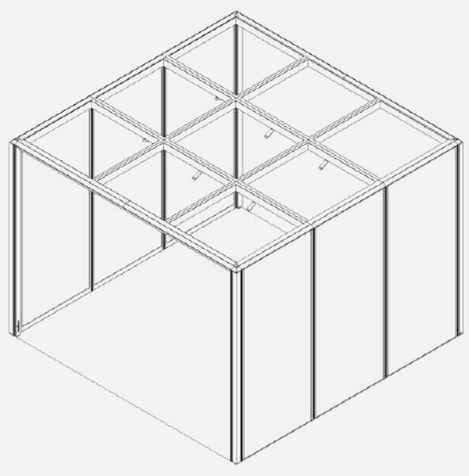

Elements of Mute Modular system may change. Availability of finishes and equipment varies by region.

Interested in this unit? Ask for an offer →

Mute © 2026 All rights reserved

Modular | MUTE.

Name	Function	Capacity	Room type	Modular size
Support 3x1 v1.0	Support	X	Open	3x1

Dimensions

317 x 115 x 238 / 226 cm
124.80 x 45.28 x 93.7 / 88.97 in.

Description

This room for facilitating office work provide space with optional seating desk for one person. It's equipped with dedicated furniture and accessories, finished with third-party fit-outs.

It is a part of Modular Support, set – multi-functional areas created for back-office functions such as storage, cloakroom, coffee corner, or copy point.

Construction

5x	solid wall module
1x	electric ceiling module
2x	solid ceiling module
2x	power distribution unit
√	control panel
√	integrated linear lamp

System furniture and accessories

1x	desk
3x	deep shelf with bookends
1x	deep shelf with rail
1x	magnet (2 pcs)
2x	wall hook
√	curtain rail
√	curtain

Sage Green

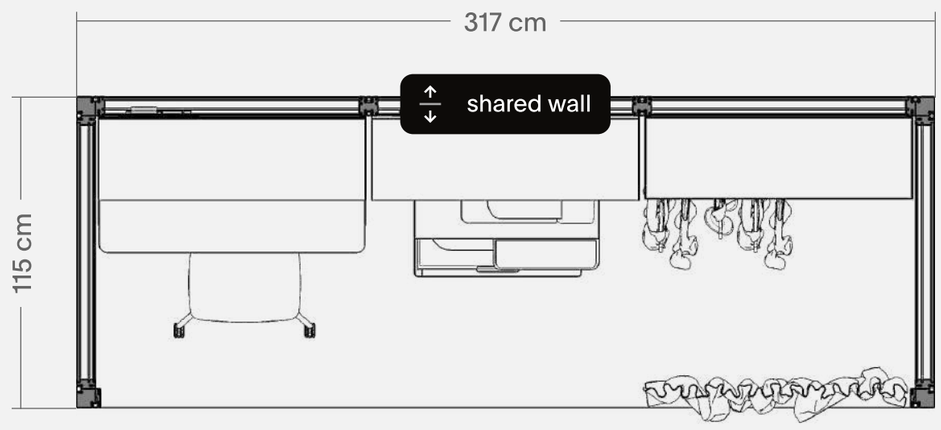

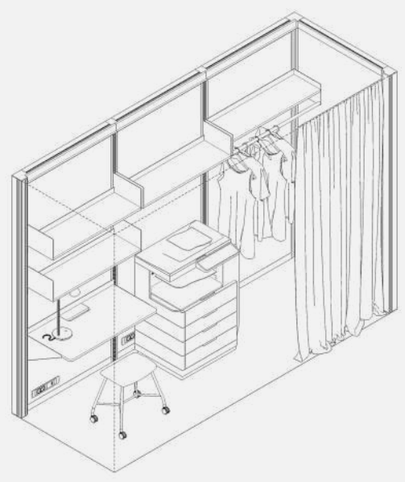

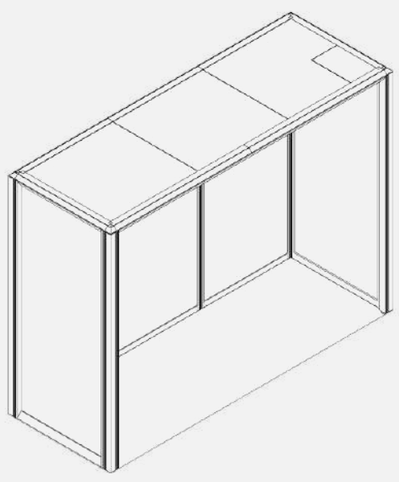

Elements of Mute Modular system may change. Availability of finishes and equipment varies by region.

Interested in this unit? Ask for an offer →

Mute © 2026 All rights reserved

Modular | MUTE.

Name	Functions	Capacity	Modular size
Hub 5	Meet + Lounge + Support	3 + 4 + X	5x3

Dimensions

534 x 317 x 238 / 226 cm
210.24 x 124.8 x 93.7 / 88.97 in.

Description

The system offers unmatched level of modularity. You can arrange individual rooms or combine them into cross-functional hubs to build the perfect, flexible office that provide space and complexity.

Colors

This hub is available in 24 colors.

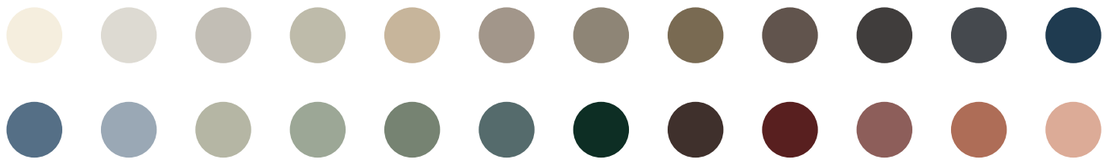

See single rooms of this hub on next pages →

This visualization contains 3rd party products which are examplary and are not sold by Mute.

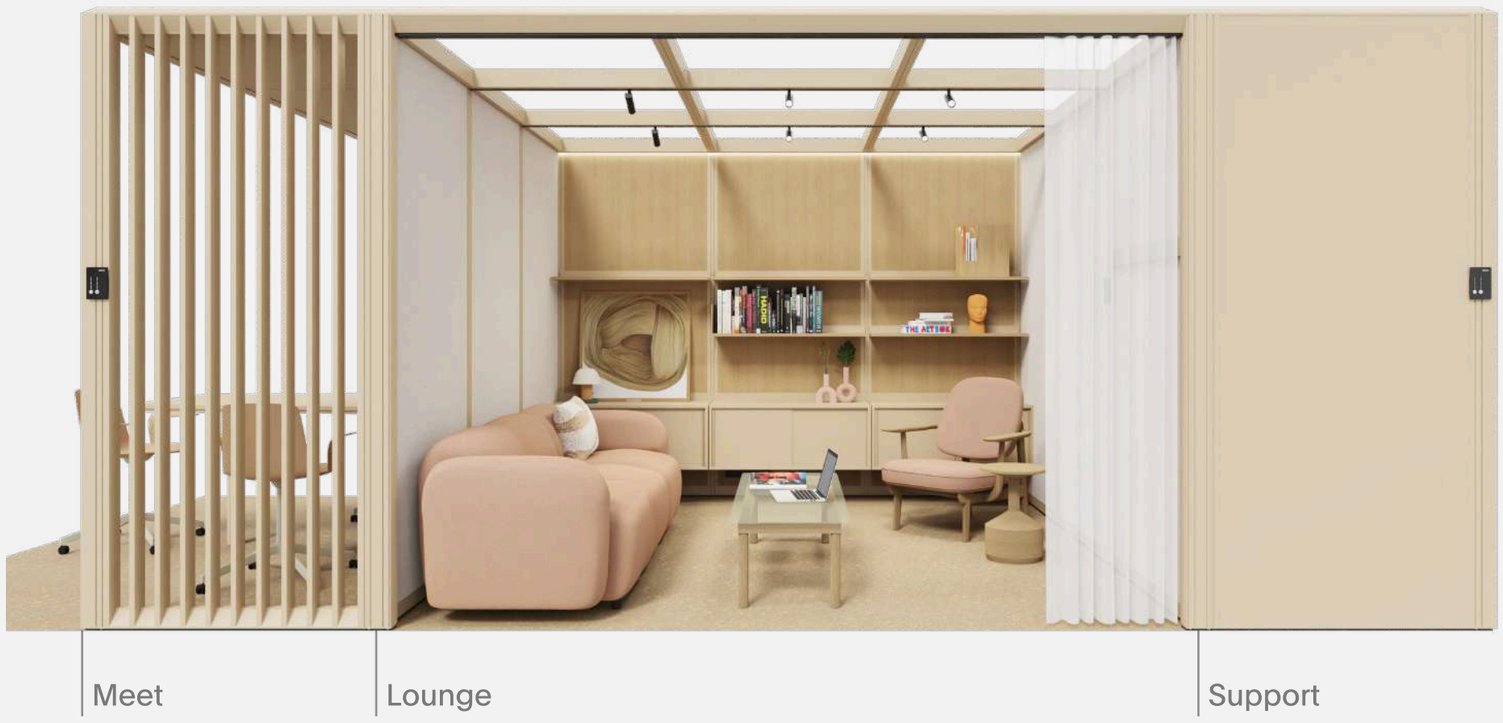

Sand Beige

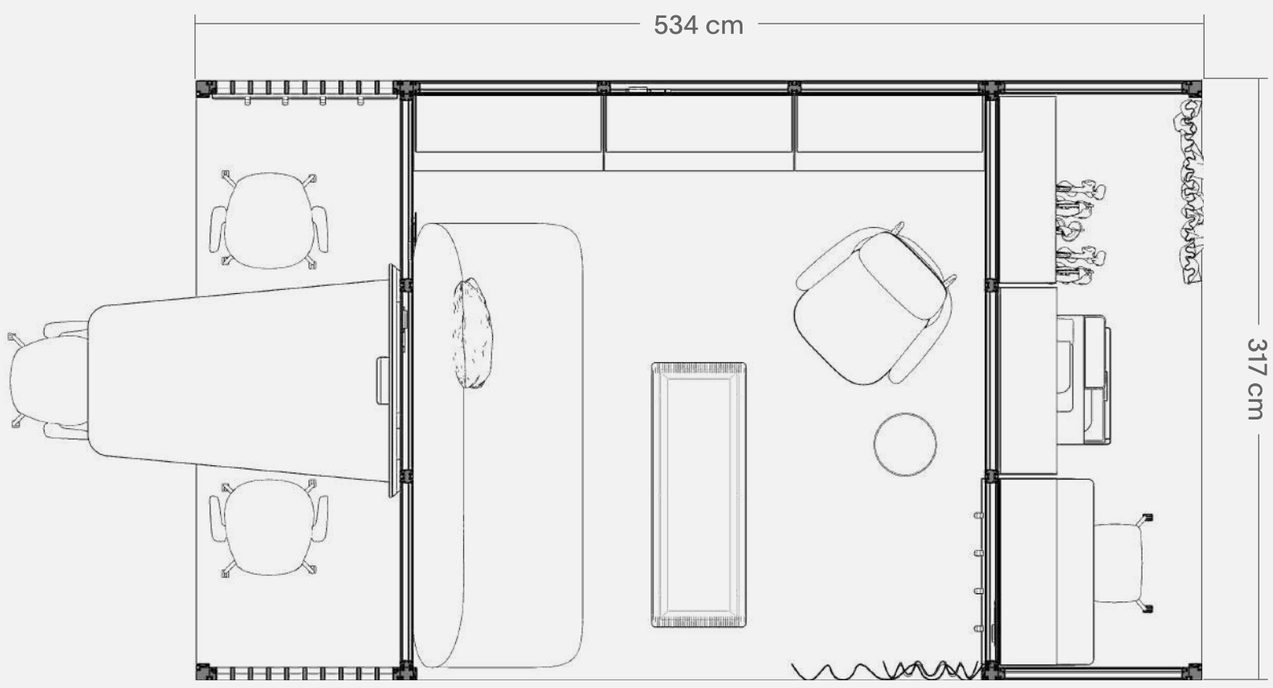

Mute © 2026 All rights reserved

Modular | MUTE.

Name	Function	Capacity	Room type	Modular size
Meet 3x1 p3.v1.O	Meet	3 people	Open	3x1

Dimensions

317 x 115 x 238 / 226 cm
124.80 x 45.28 x 93.7 / 88.97 in.

Description

This room for meetups provide space up to 3 people. It's equipped with dedicated furniture and accessories, finished with third-party fit-outs.

It is a part of Modular Meet set – places in plenty of sizes and capacities to host any gathering: team meet-ups, brainstorms, workshops, small talks, and more.

Construction

3x	solid wall module
2x	slatted wall module
1x	electric ceiling module
2x	solid ceiling module
2x	power distribution unit
√	control panel
√	integrated linear lamp

System furniture and accessories

1x	table W101xL165
1x	TV hanger - two profile
2x	wall hook
1x	whiteboard
2x	magnet (2 pcs)

Sand Beige

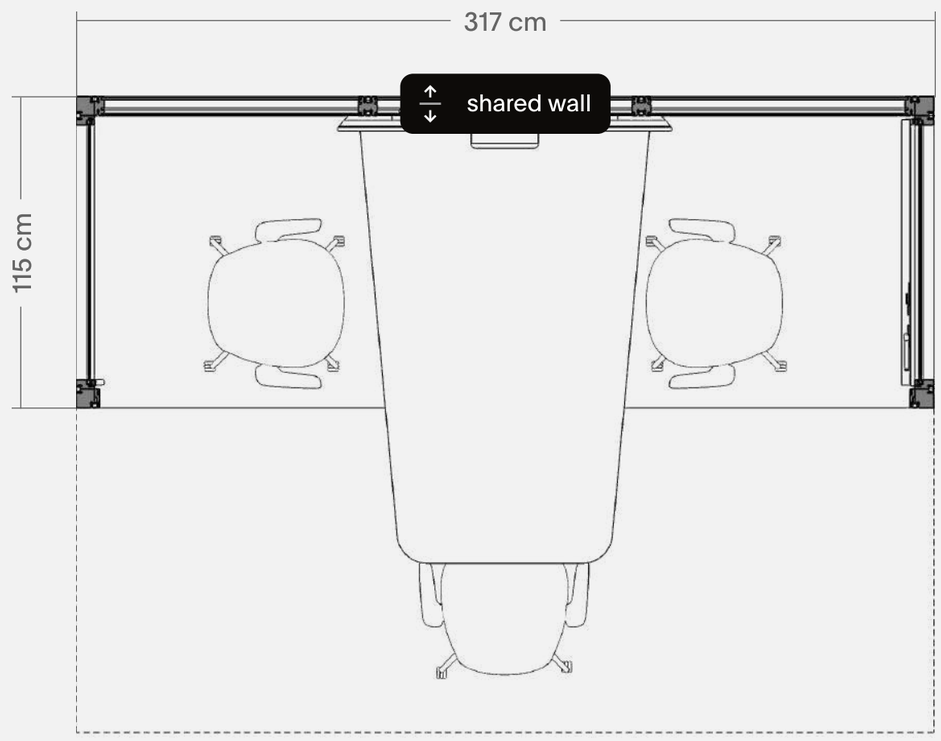

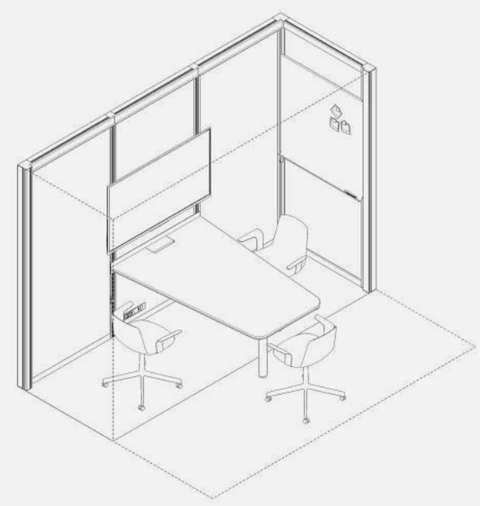

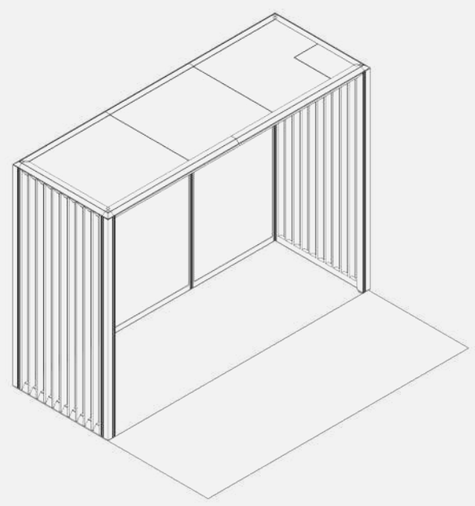

Elements of Mute Modular system may change. Availability of finishes and equipment varies by region.

Interested in this unit? Ask for an offer →

Mute © 2026 All rights reserved

Name	Function	Capacity	Room type	Modular size
Lounge 3x3 p4.v2.O	Lounge	4 people	Open	3x3

Dimensions

317 x 317 x 238 / 226 cm
124.80 x 124.80 x 93.7 / 88.97 in.

Description

This room for relaxing provide space up to 5 people. It's equipped with dedicated furniture and accessories, finished with third-party fit-outs.

It is a part of Modular Lounge set – cozy areas for less-formal meet-ups and every casual occasion. Perfect for a waiting lounge, chill-out area, or gaming room.

Construction

9x	solid wall module
1x	power distribution unit
6x	Flask track lighting
√	control panel
√	integrated linear lamp

System furniture and accessories

4x	deep shelf
2x	deep shelf with left bookend
3x	sliding door cabinet
1x	whiteboard
3x	display rail
1x	display rail hook (4 pcs)
2x	display stand
√	curtain rail
√	curtain

Sand Beige

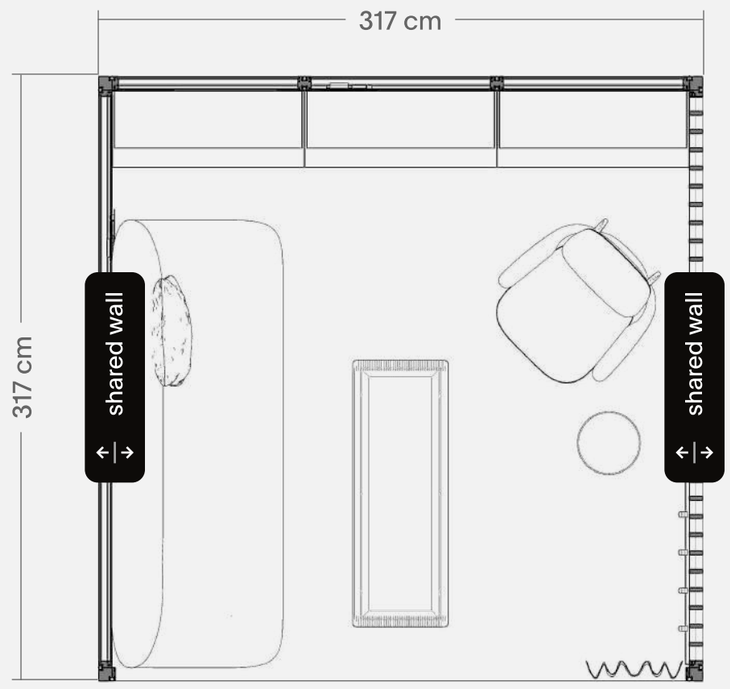

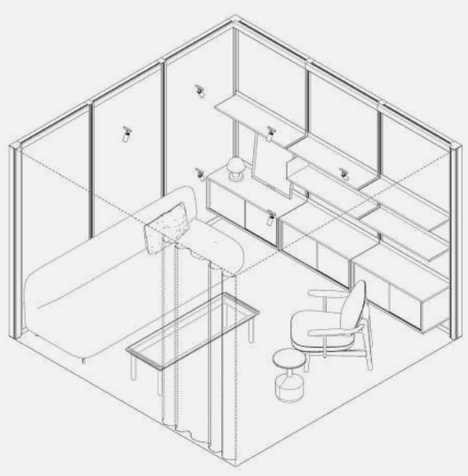

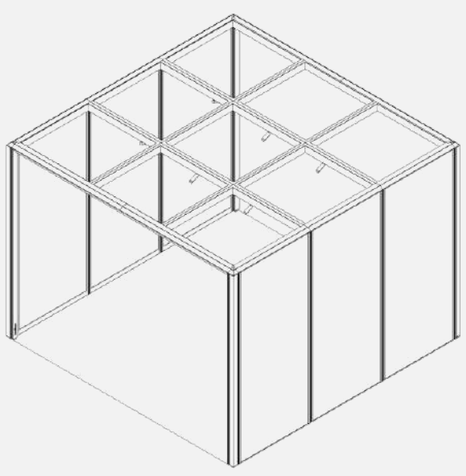

Elements of Mute Modular system may change. Availability of finishes and equipment varies by region.

Interested in this unit? Ask for an offer →

Mute © 2026 All rights reserved

Modular | MUTE.

Name	Function	Capacity	Room type	Modular size
Support 3x1 v1.0	Support	X	Open	3x1

Dimensions

317 x 115 x 238 / 226 cm
124.80 x 45.28 x 93.7 / 88.97 in.

Description

This room for facilitating office work provide space with optional seating desk for one person. It's equipped with dedicated furniture and accessories, finished with third-party fit-outs.

It is a part of Modular Support, set – multi-functional areas created for back-office functions such as storage, cloakroom, coffee corner, or copy point.

Construction

5x	solid wall module
1x	electric ceiling module
2x	solid ceiling module
2x	power distribution unit
√	control panel
√	integrated linear lamp

System furniture and accessories

1x	desk 100
3x	deep shelf with bookends
1x	deep shelf with rail
1x	magnet (2 pcs)
2x	wall hook
√	curtain rail
√	curtain

Sand Beige

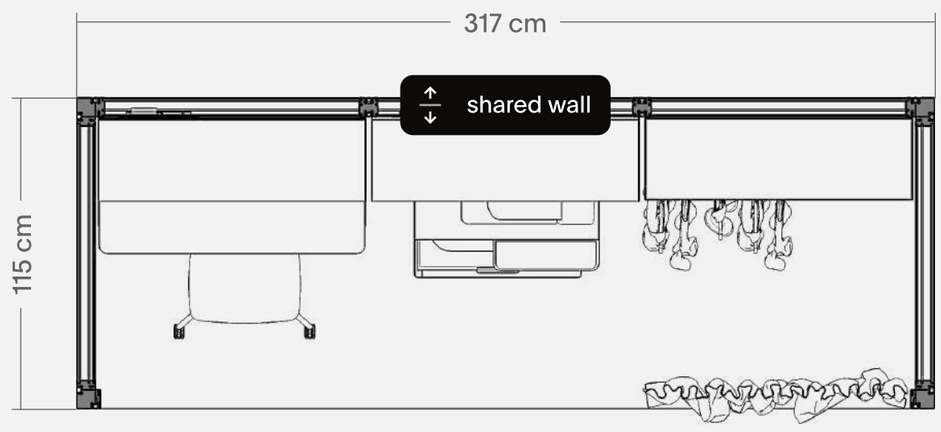

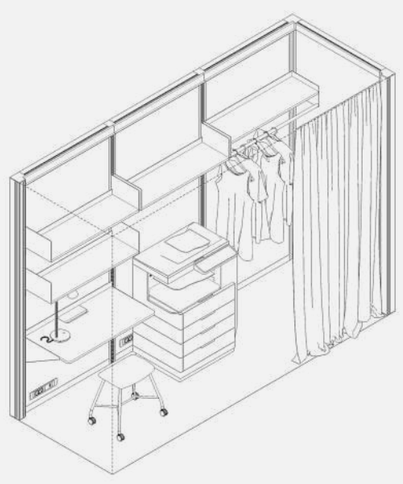

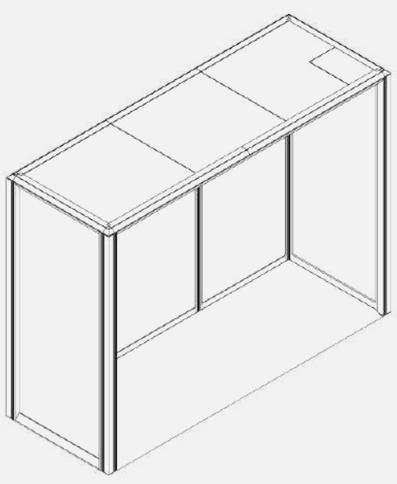

Elements of Mute Modular system may change. Availability of finishes and equipment varies by region.

Interested in this unit? Ask for an offer →

Mute © 2026 All rights reserved

Modular | MUTE.

Name	Functions	Capacity	Modular size
Hub 6	Work + Work	1 + 1	2x2

Dimensions

223 x 216 x 238 / 226 cm
87.8 x 85.04 x 93.7 / 88.97 in.

Description

The system offers unmatched level of modularity. You can arrange individual rooms or combine them into cross-functional hubs to build the perfect, flexible office that provide space and complexity.

Colors

This hub is available in 24 colors.

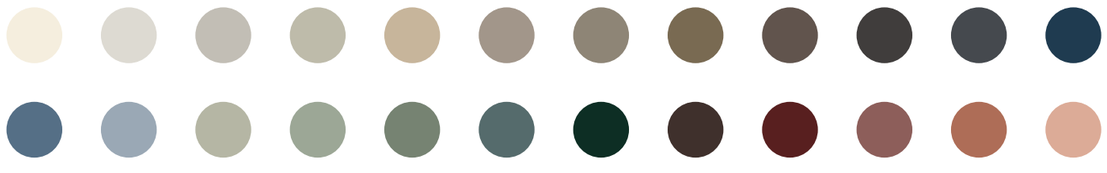

See single rooms of this hub on next pages →

This visualization contains 3rd party products which are examplary and are not sold by Mute.

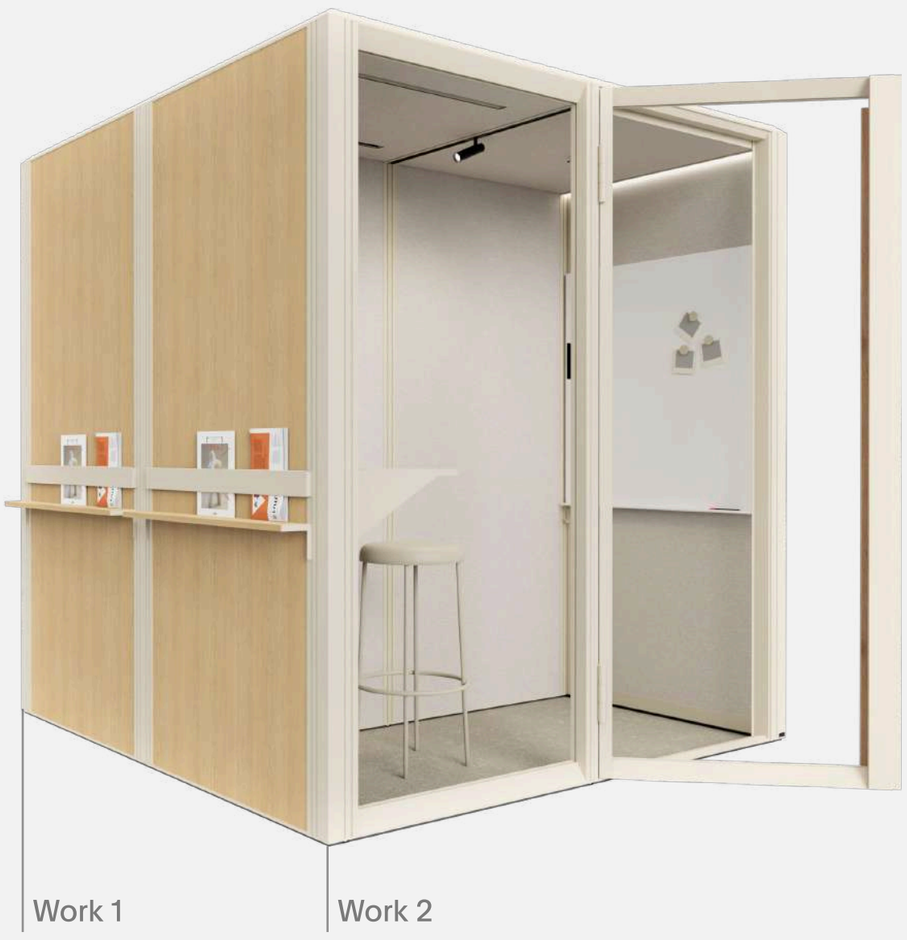

Moon White

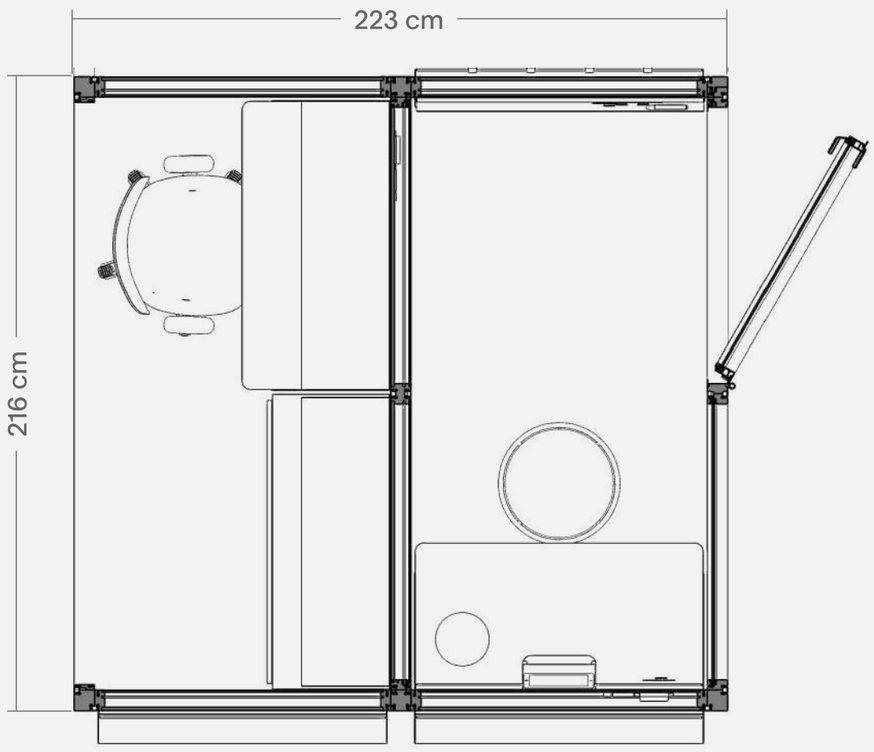

Mute © 2026 All rights reserved

Name	Function	Capacity	Room type	Modular size
Work 2x1 p1.v3.O	Work	1 person	Open	2x1

Dimensions

216 x 115 x 238 / 226 cm
85.04 x 45.28 x 93.7 / 88.97 in.

Description

This room for collaborative work provide space and calm for two people. It's equipped with dedicated furniture and accessories, finished with third-party fit-outs.

It is a part of Modular Work set – areas designed purposefully to offer comfort and privacy for the individual, focused work, or small collaborative sessions.

Construction

4x	solid wall module
1x	electric ceiling module
2x	solid ceiling module
1x	power distribution unit
√	control panel
√	integrated linear lamp

System furniture and accessories

2x	shallow shelf
2x	depp shelf
2x	deep shelf with left bookend
1x	two-drawer cabinet
1x	desk 100
2x	display rail
1x	magnet (2 pcs)
2x	wall hook

Moon White

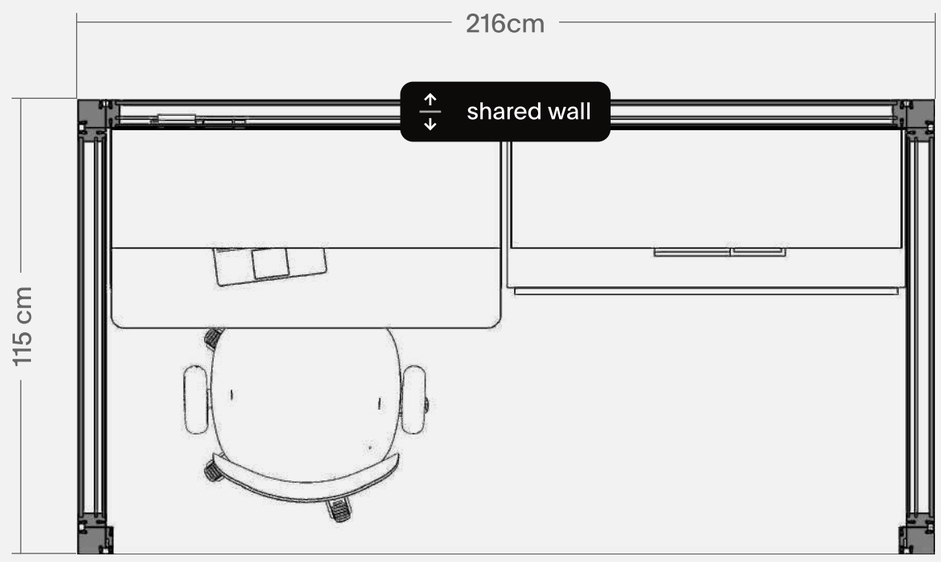

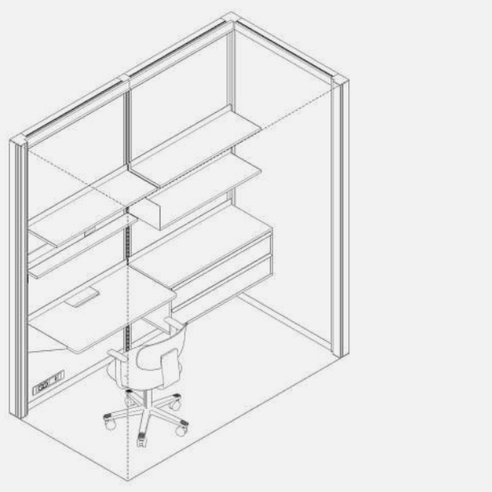

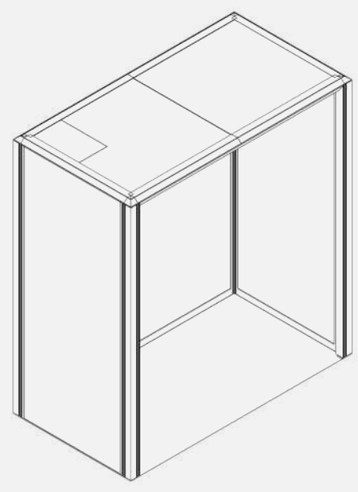

Elements of Mute Modular system may change. Availability of finishes and equipment varies by region.

Interested in this unit? Ask for an offer →

Mute © 2026 All rights reserved

Name	Function	Capacity	Room type	Modular size
Work 2x1 p1.v2.C	Work	1 person	Closed	3x1

Dimensions

216 x 115 x 238 / 226 cm
85.04 x 45.28 x 93.7 / 88.97 in.

Description

This room for collaborative work provide space and calm for one person. It's equipped with dedicated furniture and accessories, finished with third-party fit-outs.

It is a part of Modular Work set – areas designed purposefully to offer comfort and privacy for the individual, focused work, or small collaborative sessions.

Construction

4x	solid wall module
1x	glass wall module
1x	left-hand glass door
1x	ventilation ceiling module
1x	electric ceiling module
1x	power distribution unit
√	control panel
√	integrated linear lamp

System furniture and accessories

1x	shallow shelf
1x	desk 100
1x	whiteboard
3x	display rail
1x	display rail hook (4 pcs)
2x	magnet (2 pcs)
2x	wall hook
1x	phone holder

Moon White

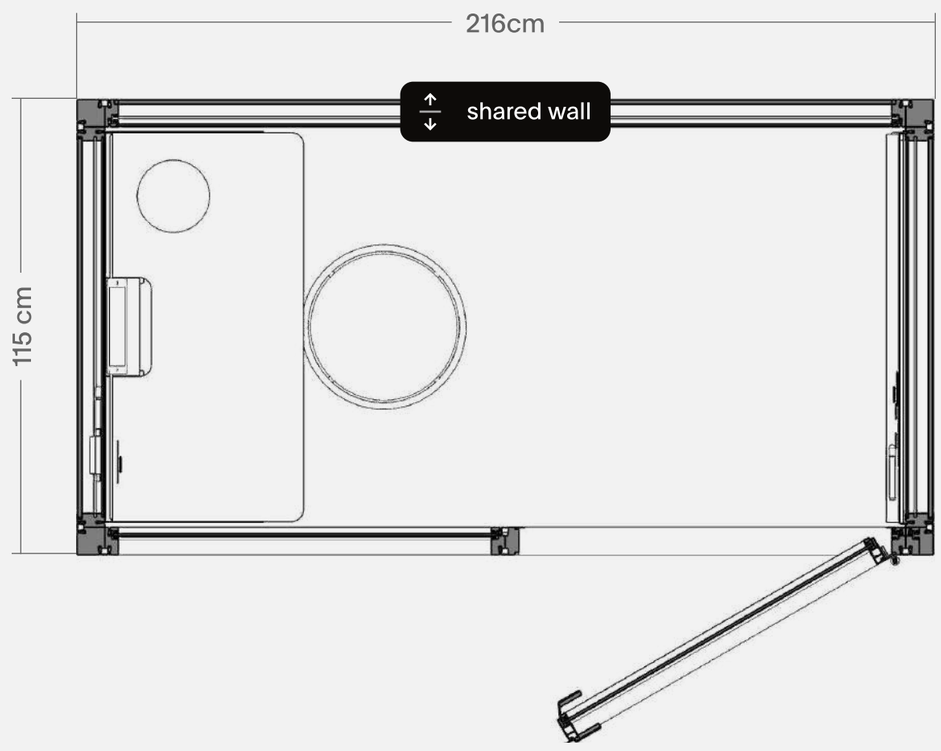

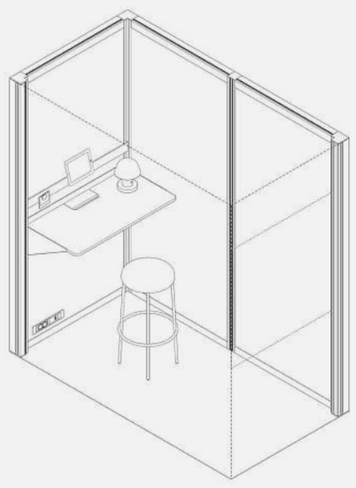

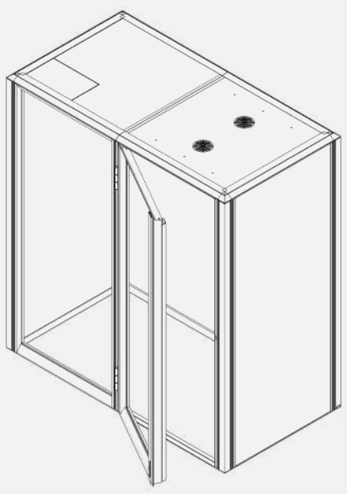

Elements of Mute Modular system may change. Availability of finishes and equipment varies by region.

Interested in this unit? Ask for an offer →

Mute © 2026 All rights reserved

Modular | MUTE.

Name	Functions	Capacity	Modular size
Hub 7	Support + Work	1 + X	2x1,5

Dimensions

216 x 172,5 x 238 / 226 cm
85.04 x 67.91 x 93.7 / 88.97 in.

Description

The system offers unmatched level of modularity. You can arrange individual rooms or combine them into cross-functional hubs to build the perfect, flexible office that provide space and complexity.

Colors

This hub is available in 24 colors.

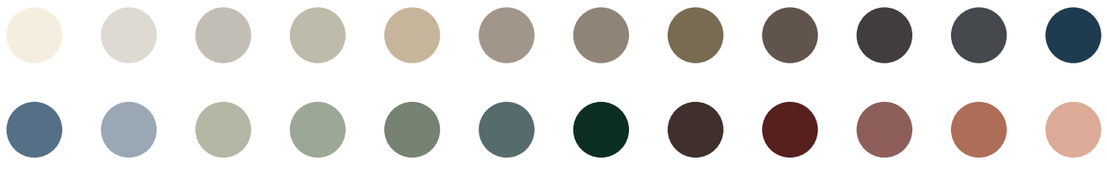

See single rooms of this hub on next pages →

This visualization contains 3rd party products which are examplary and are not sold by Mute.

Ink Blue

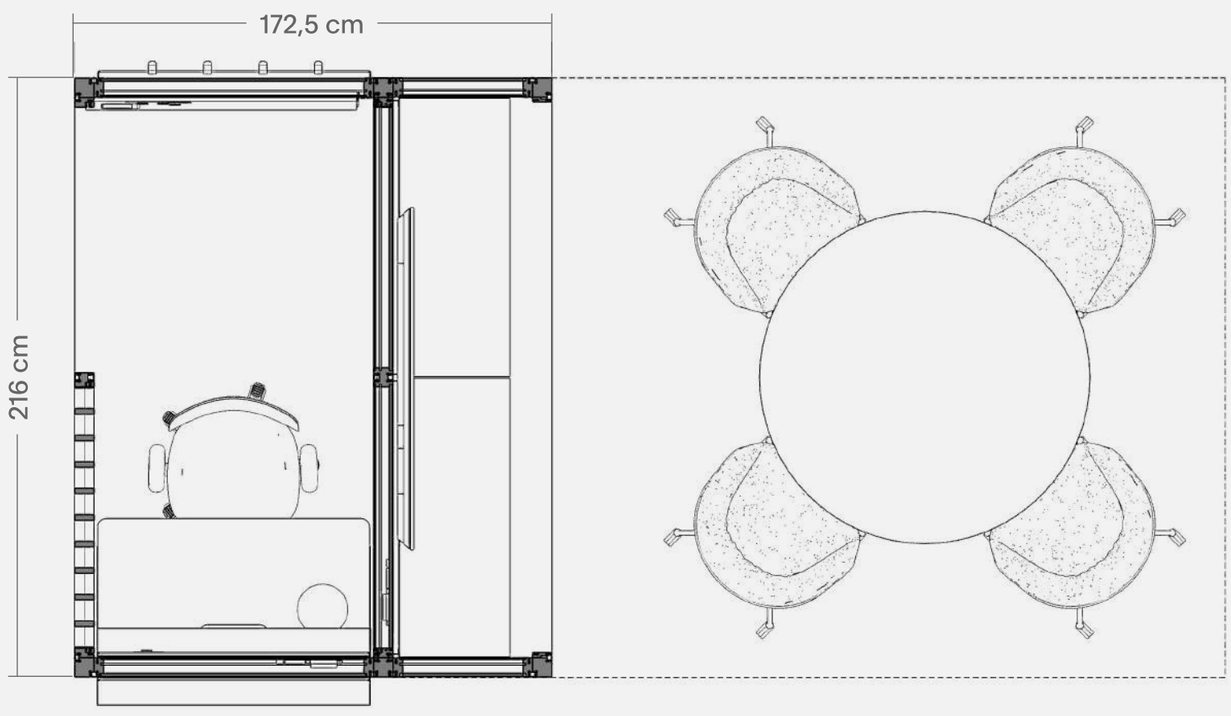

Mute © 2026 All rights reserved

Modular | MUTE.

Name	Function	Capacity	Room type	Modular size
Support 2x0,5 v2.O	Support	X	Open	2x0,5

Dimensions

216 x 64,5 x 238 / 226 cm
85.04 x 25.39 x 93.7 / 88.97 in.

Description

This room for facilitating office work provide space and functionality. It's equipped with dedicated furniture and accessories, finished with third-party fit-outs.

It is a part of Modular Support, set – multi-functional areas created for back-office functions such as storage, cloakroom, coffee corner, or copy point.

Construction

4x	solid wall module
1x	electric ceiling module
1x	solid ceiling module
2x	power distribution unit
√	control panel
√	integrated linear lamp

System furniture and accessories

2x	sliding door cabinet
1x	TV hanger - one profile

Ink Blue

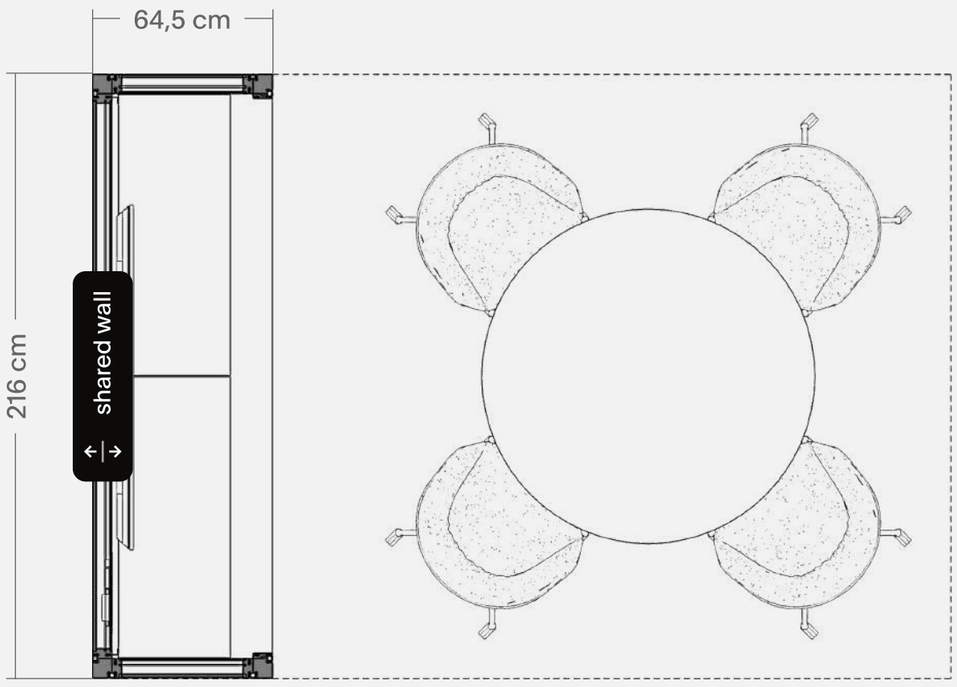

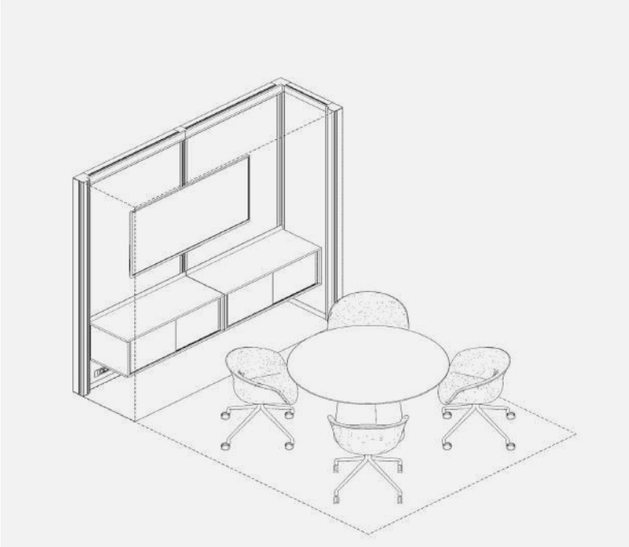

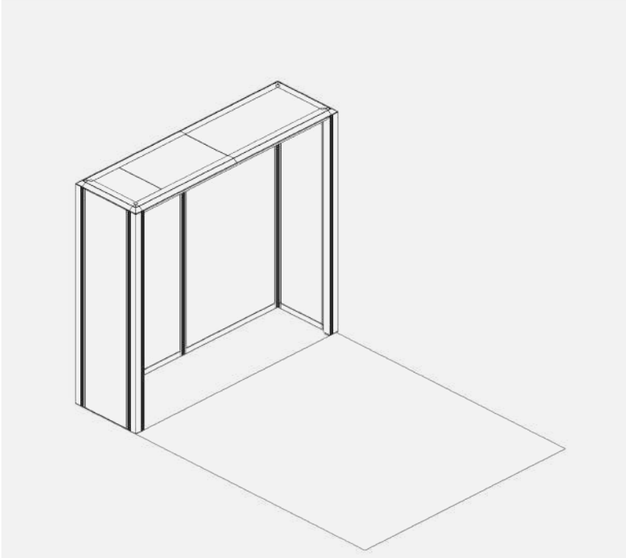

Elements of Mute Modular system may change. Availability of finishes and equipment varies by region.

Interested in this unit? Ask for an offer →

Mute © 2026 All rights reserved

Name	Function	Capacity	Room type	Modular size
Work 2x1 p1.v1.O	Work	1 person	Open	2x1

Dimensions

216 x 115 x 238 / 226 cm
85.04 x 45.28 x 93.7 / 88.97 in.

Description

This room for collaborative work provide space and calm for one person. It's equipped with dedicated furniture and accessories, finished with third-party fit-outs.

It is a part of Modular Work set – areas designed purposefully to offer comfort and privacy for the individual, focused work, or small collaborative sessions.

Construction

4x	solid wall module
1x	electric ceiling module
1x	solid ceiling module
2x	power distribution unit
√	control panel
√	integrated linear lamp

System furniture and accessories

2x	sliding door cabinet
1x	TV hanger - one profile

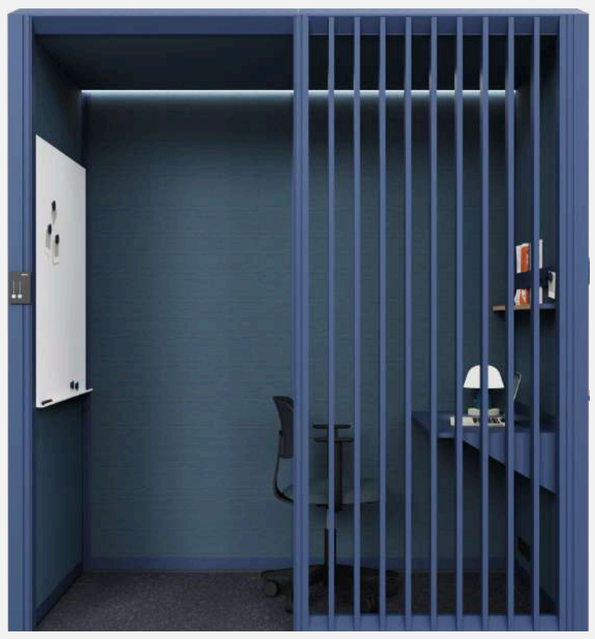

Ink Blue

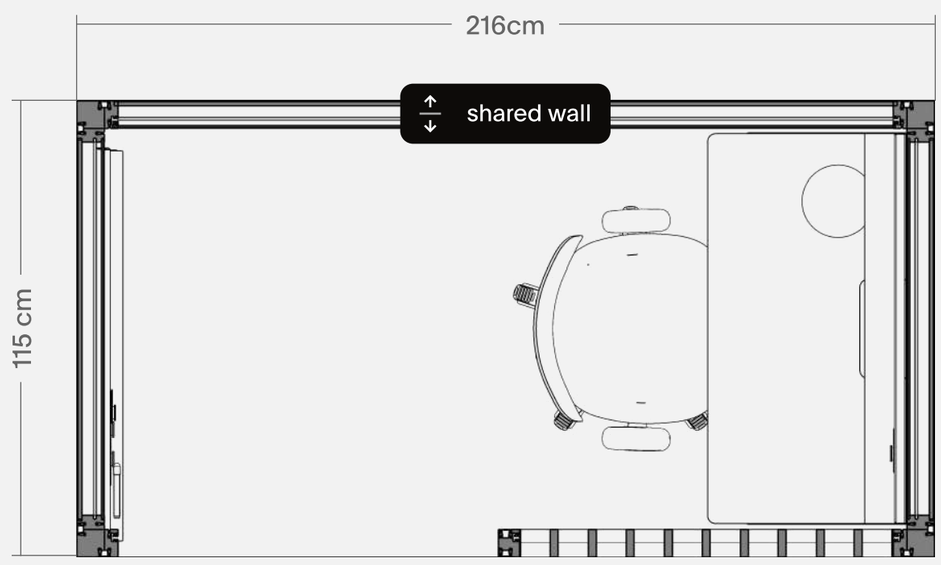

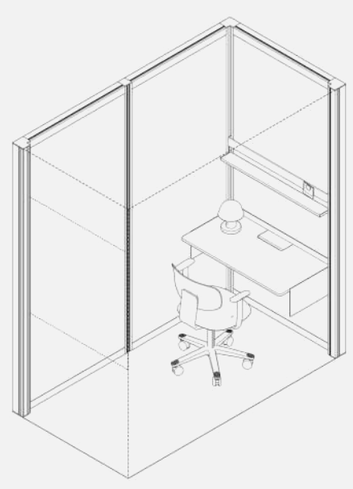

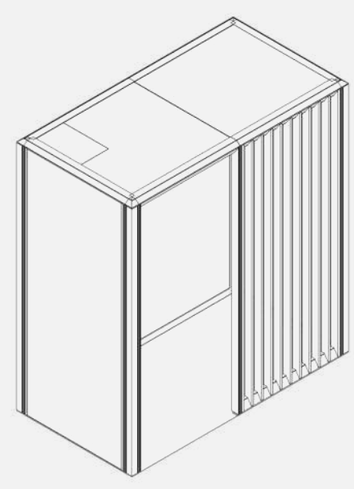

Elements of Mute Modular system may change. Availability of finishes and equipment varies by region.

Interested in this unit? Ask for an offer →

Mute © 2026 All rights reserved

Modular | MUTE.

Name	Functions	Capacity	Modular size
Hub 8	Work + Lounge	2 + 2	2x2

Dimensions

223 x 216 x 238 / 226 cm
87.8 x 85.04 x 93.7 / 88.97 in.

Description

Mute Modular is a perfect solution for creating functional office Hubs. They can be arranged with workstations as hot desks zones or lounge areas, effectively separating office zones.

Colors

This hub is available in 24 colors.

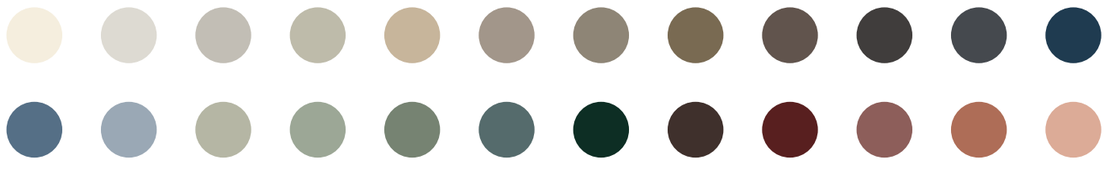

See single rooms of this hub on next pages →

This visualization contains 3rd party products which are examplary and are not sold by Mute.

Sand Beige

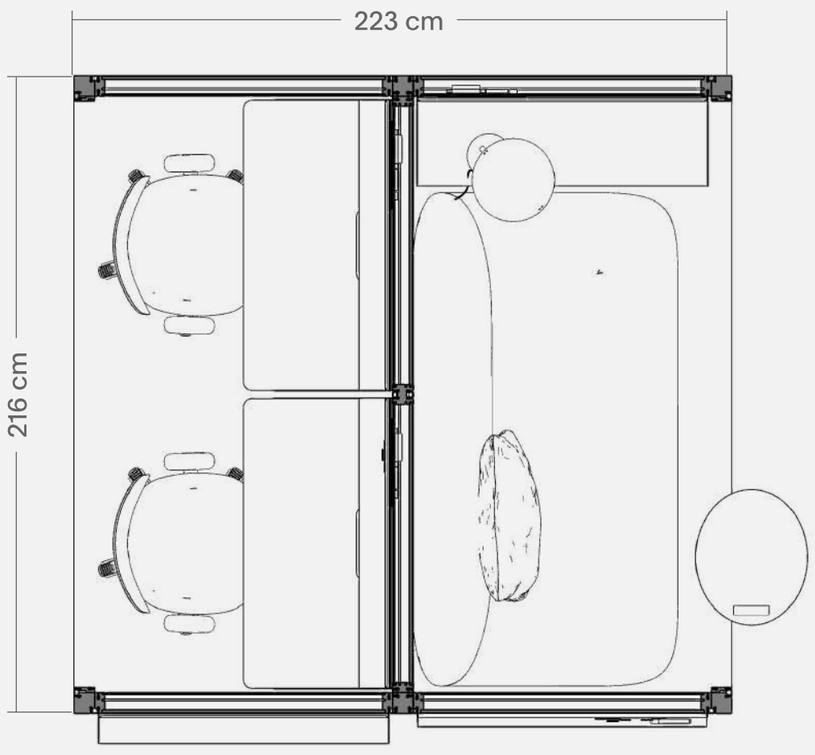

Mute © 2026 All rights reserved

Name	Function	Capacity	Room type	Modular size
Work 2x1 p2.v1.O	Work	2 people	Open	2x1

Dimensions

216 x 115 x 238 / 226 cm
85.04 x 45.28 x 93.7 / 88.97 in.

Description

This room for collaborative work provide space and calm for two people. It's equipped with dedicated furniture and accessories, finished with third-party fit-outs.

It is a part of Modular Work set – areas designed purposefully to offer comfort and privacy for the individual, focused work, or small collaborative sessions.

Construction

4x	solid wall module
1x	electric ceiling module
1x	solid ceiling module
2x	power distribution unit
√	control panel
√	integrated linear lamp

System furniture and accessories

4x	shallow shelf
2x	desk
4x	display rail
2x	magnet
2x	wall hook

Sand Beige

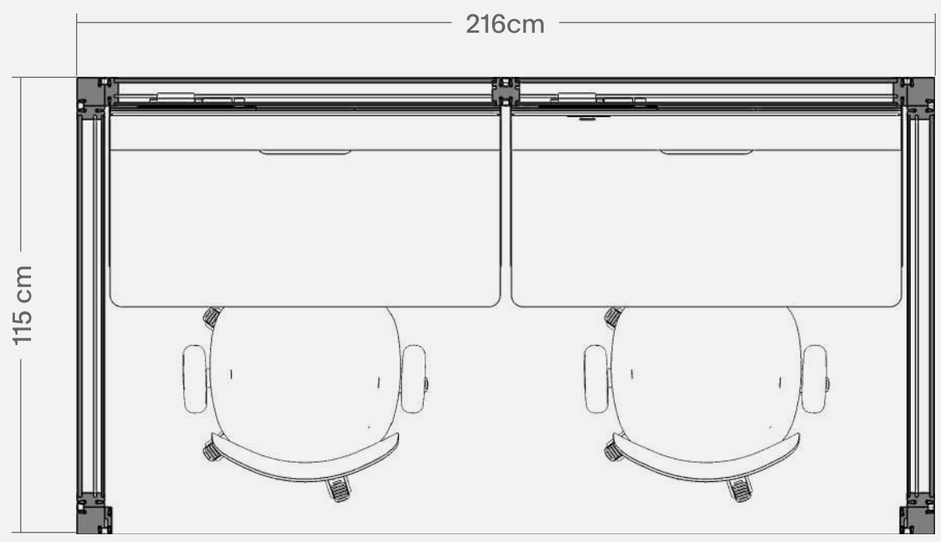

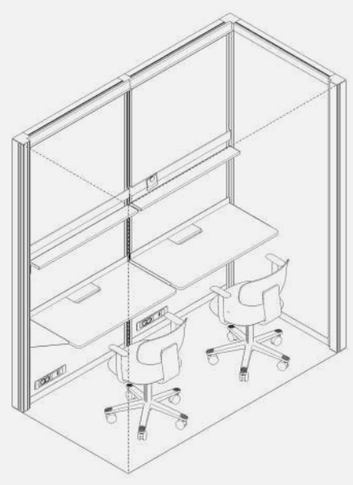

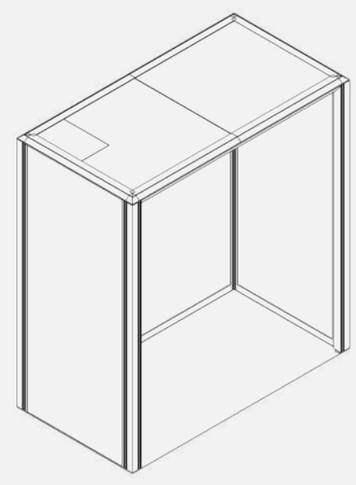

Elements of Mute Modular system may change. Availability of finishes and equipment varies by region.

Interested in this unit? Ask for an offer →

Mute © 2026 All rights reserved

Name	Function	Capacity	Room type	Modular size
Lounge 2x1 p2.v1.O	Lounge	2 people	Open	2x1

Dimensions

216 x 115 x 238 / 226 cm
85.04 x 45.28 x 93.7 / 88.97 in.

Description

This room for relaxing provide space for two people. It's equipped with dedicated furniture and accessories, finished with third-party fit-outs.

It is a part of Modular Lounge set – cozy areas for less-formal meet-ups and every casual occasion. Perfect for a waiting lounge, chill-out area, or gaming room.

Construction

4x	solid wall module
1x	electric ceiling module
1x	solid ceiling module
1x	power distribution unit
√	control panel
√	integrated linear lamp

System furniture and accessories

1x	deep shelf
1x	display rail
1x	whiteboard
2x	magnet (2 pcs)

Sand Beige

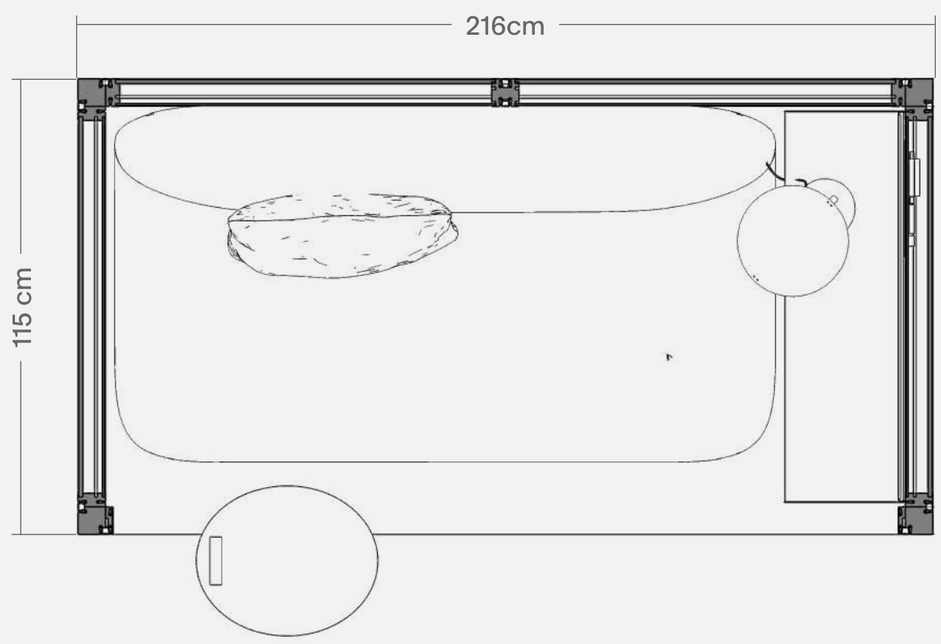

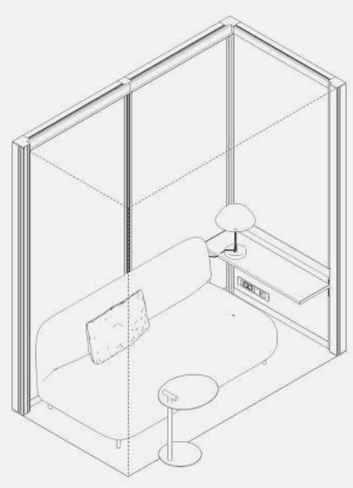

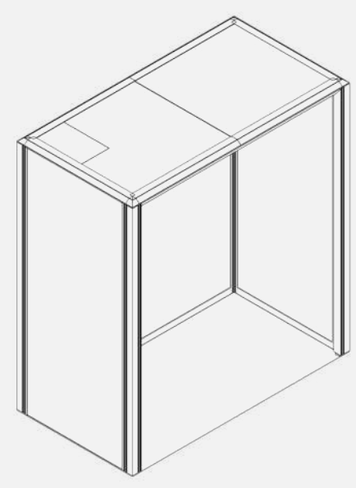

Elements of Mute Modular system may change. Availability of finishes and equipment varies by region.

Interested in this unit? Ask for an offer →

Mute © 2026 All rights reserved

Modular | MUTE.

Name	Functions	Capacity	Modular size
Hub 9	Work + Meet	?	3x2

Dimensions

317 x 223 x 238 / 226 cm
124.8 x 87.8 x 93.7 / 88.97 in.

Description

Mute Modular is a perfect solution for creating functional office Hubs. They can be arranged with workstations as hot desks zones or lounge areas, effectively separating office zones.

Colors

This hub is available in 24 colors.

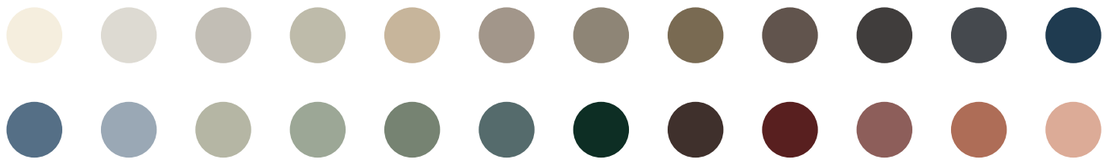

See single rooms of this hub on next pages →

This visualization contains 3rd party products which are examplary and are not sold by Mute.

Clay Red

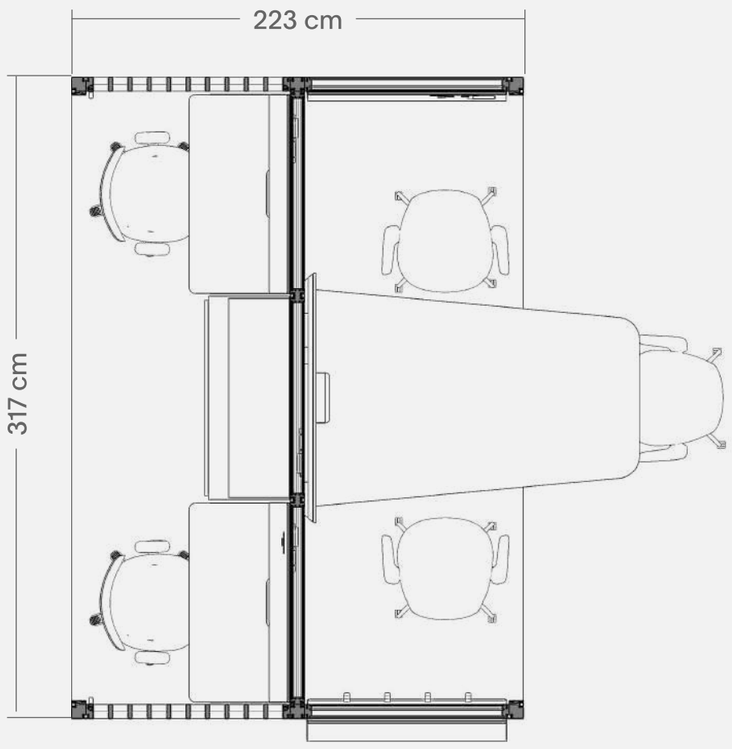

Mute © 2026 All rights reserved

Name	Function	Capacity	Room type	Modular size
Work 3x1 p2.v1.O	Work	2 people	Open	3x1

Dimensions

317 x 115 x 238 / 226 cm
124.80 x 45.28 x 93.7 / 88.97 in.

Description

This room for collaborative work provide space and calm for two people. It's equipped with dedicated furniture and accessories, finished with third-party fit-outs.

It is a part of Modular Work set – areas designed purposefully to offer comfort and privacy for the individual, focused work, or small collaborative sessions.

Construction

3x	solid wall module
2x	slatted wall module
1x	electric ceiling module
2x	solid ceiling module
2x	power distribution unit
√	control panel
√	integrated linear lamp

System furniture and accessories

2x	shallow shelf
1x	deep shelf with bookends
1x	two-drawer cabinet
2x	desk 100
2x	display rail
1x	magnet (2 pcs)
2x	wall hook

Clay Red

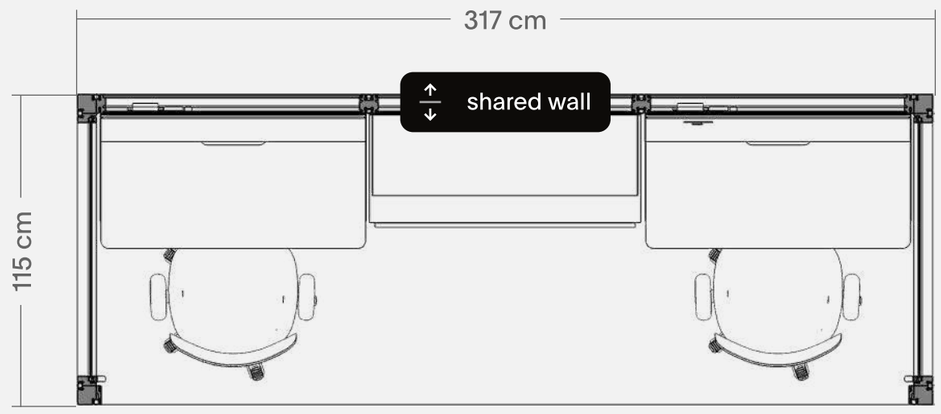

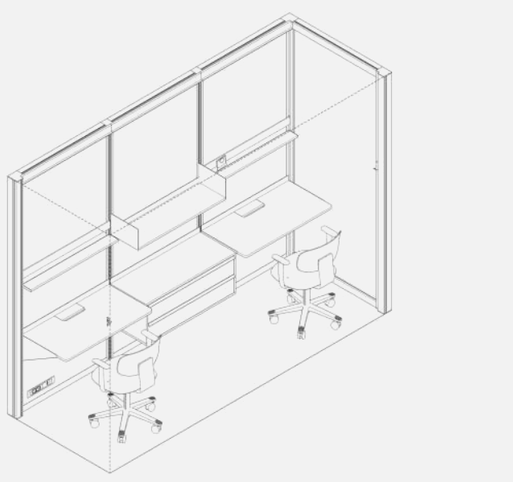

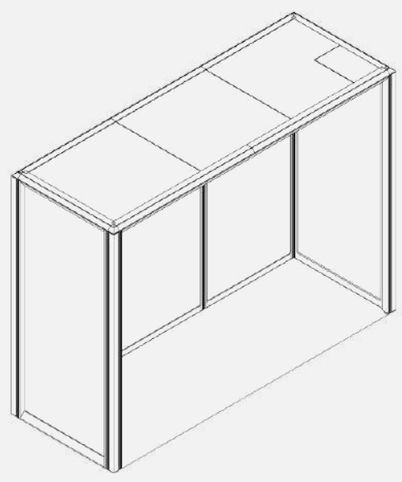

Elements of Mute Modular system may change. Availability of finishes and equipment varies by region.

Interested in this unit? Ask for an offer →

Mute © 2026 All rights reserved

Name	Function	Capacity	Room type	Modular size
Meet 3x1 p3.v1.O	Meet	3 people	Open	3x1

Dimensions

317 x 115 x 238 / 226 cm
124.80 x 45.28 x 93.7 / 88.97 in.

Description

This room for meetups provide space up to 3 people. It's equipped with dedicated furniture and accessories, finished with third-party fit-outs.

It is a part of Modular Meet set – places in plenty of sizes and capacities to host any gathering: team meet-ups, brainstorms, workshops, small talks, and more.

Construction

3x	solid wall module
2x	slatted wall module
1x	electric ceiling module
2x	solid ceiling module
2x	power distribution unit
√	control panel
√	integrated linear lamp

System furniture and accessories

1x	table W101xL165
1x	TV hanger - two profile
2x	wall hook
1x	whiteboard
2x	magnet (2 pcs)
1x	display rail hook (4 pcs)
1x	display rail

Clay Red

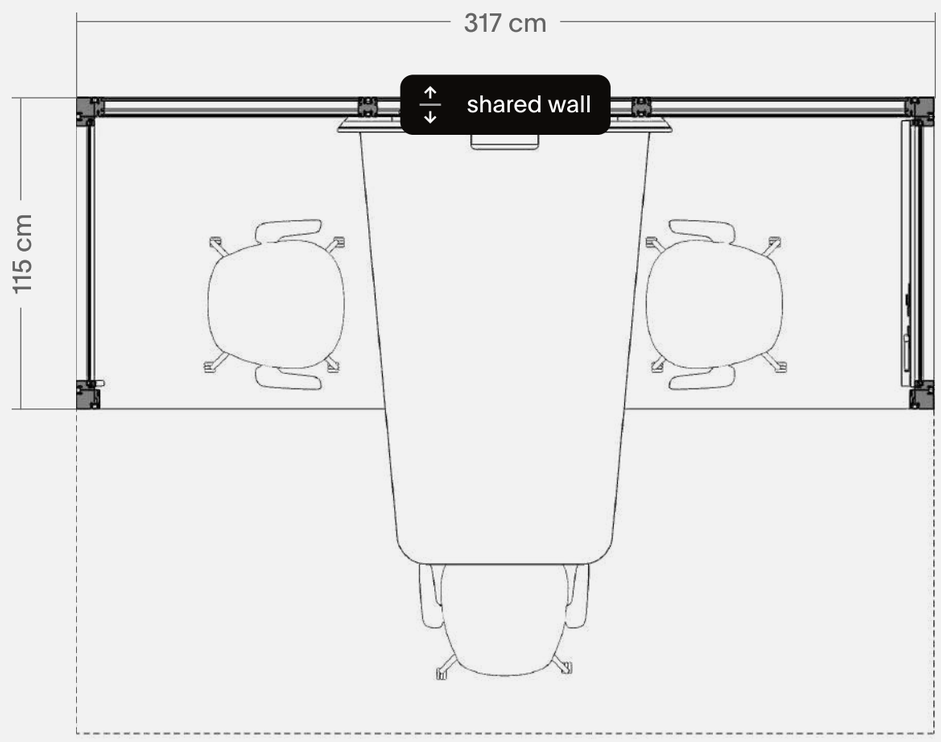

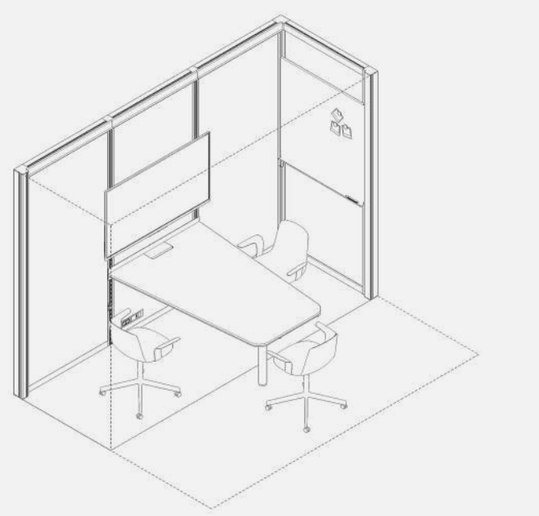

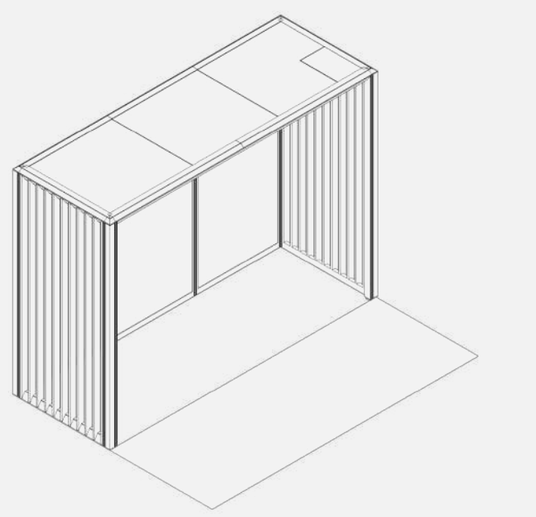

Elements of Mute Modular system may change. Availability of finishes and equipment varies by region.

Interested in this unit? Ask for an offer →

Mute © 2026 All rights reserved

Modular | MUTE.

Name	Functions	Capacity	Modular size
Hub 10	Work + Support	2 + X	3x1,5

Dimensions

317 x 172,5 x 238 / 226 cm
124.8 x 67.91 x 93.7 / 88.97 in.

Description

Mute Modular is a perfect solution for creating functional office Hubs. They can be arranged with workstations as hot desks zones or lounge areas, effectively separating office zones.

Colors

This hub is available in 24 colors.

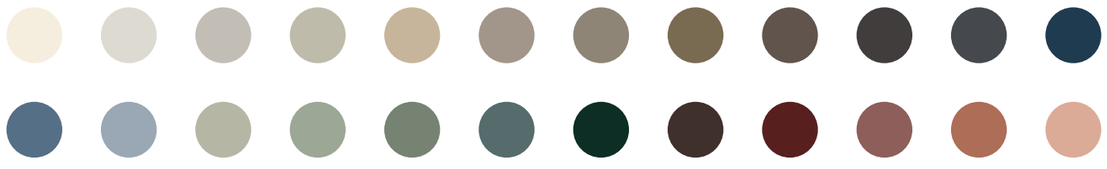

See single rooms of this hub on next pages →

This visualization contains 3rd party products which are examplary and are not sold by Mute.

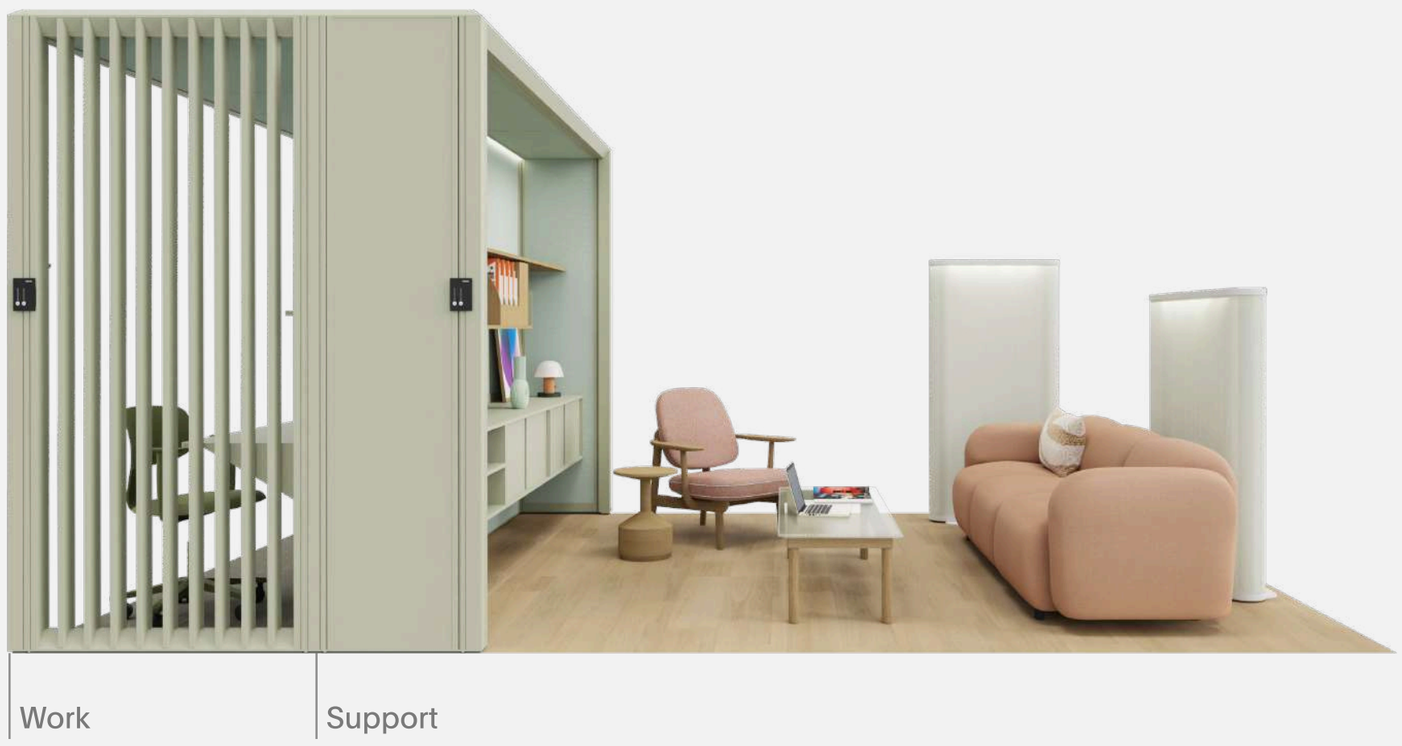

Sage Green

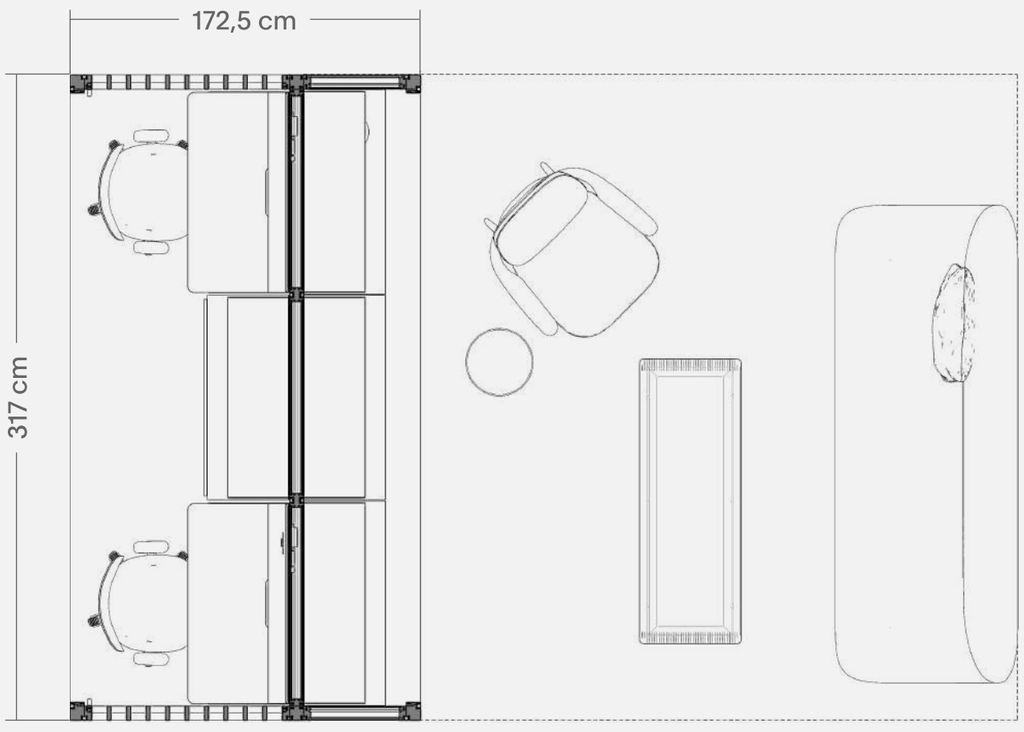

Mute © 2026 All rights reserved

Modular | MUTE.

Name	Function	Capacity	Room type	Modular size
Work 3x1 p2.v1.O	Work	2 people	Open	3x1

Dimensions

317 x 115 x 238 / 226 cm
124.80 x 45.28 x 93.7 / 88.97 in.

Description

This room for collaborative work provide space and calm for two people. It's equipped with dedicated furniture and accessories, finished with third-party fit-outs.

It is a part of Modular Work set – areas designed purposefully to offer comfort and privacy for the individual, focused work, or small collaborative sessions.

Construction

3x	solid wall module
2x	slatted wall module
1x	electric ceiling module
2x	solid ceiling module
2x	power distribution unit
√	control panel
√	integrated linear lamp

System furniture and accessories

2x	shallow shelf
1x	deep shelf with bookends
1x	two-drawer cabinet
2x	desk 100
2x	display rail
1x	magnet (2 pcs)
2x	wall hook

Sage Green

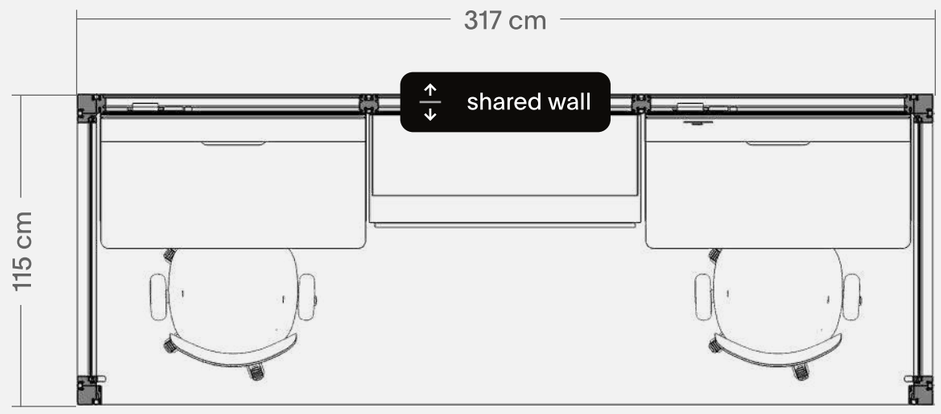

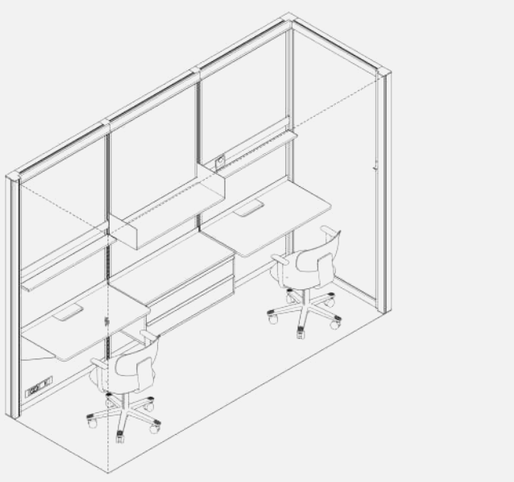

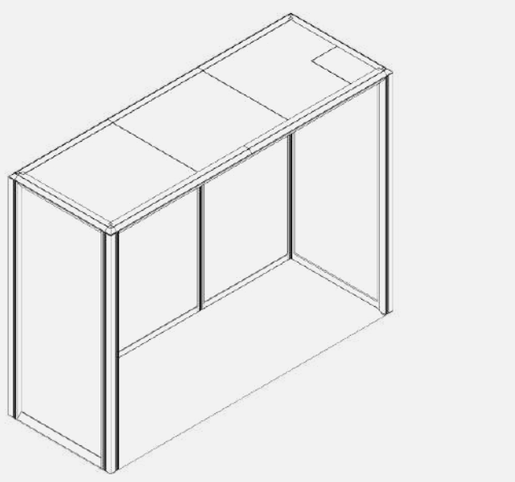

Elements of Mute Modular system may change. Availability of finishes and equipment varies by region.

Interested in this unit? Ask for an offer →

Mute © 2026 All rights reserved

Modular | MUTE.

Name	Function	Capacity	Room type	Modular size
Support 3x0,5 v2.O	Support	X	Open	3x0,5

Dimensions

317 x 65,5 x 238 / 226 cm
124.80 x 25.39 x 93.7 / 88.97 in.

Description

This room for facilitating office work provide space and functionality. It's equipped with dedicated furniture and accessories, finished with third-party fit-outs.

It is a part of Modular Support, set – multi-functional areas created for back-office functions such as storage, cloakroom, coffee corner, or copy point.

Construction

5x	solid wall module
1x	electric ceiling module
2x	solid ceiling module
1x	power distribution unit
√	control panel
√	integrated linear lamp

System furniture and accessories

4x	deep shelf
1x	open shelf cabinet
2x	sliding door cabinet
1x	deep shelf with right bookend
1x	display stand

Sage Green

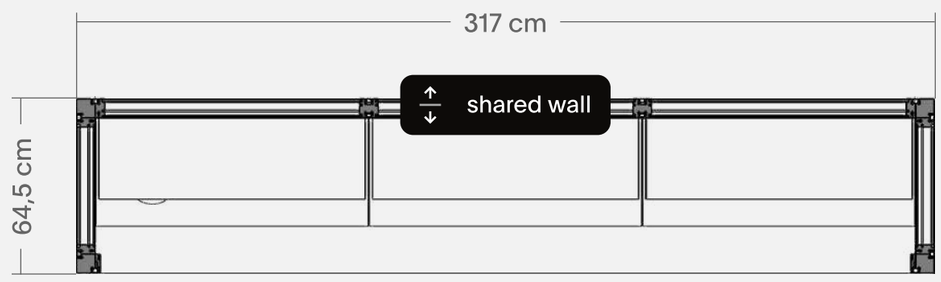

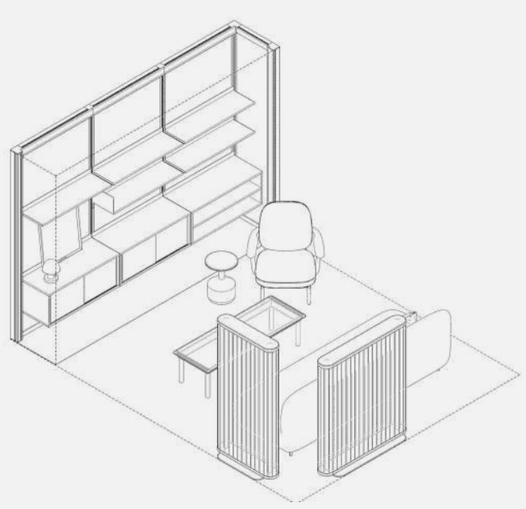

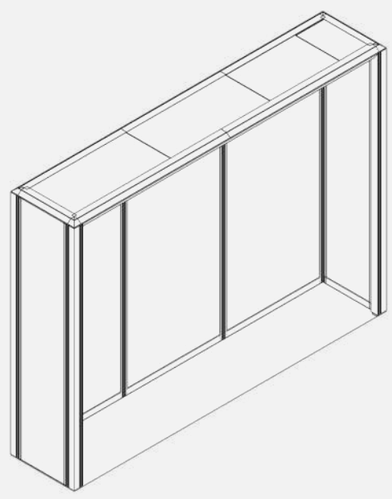

Elements of Mute Modular system may change. Availability of finishes and equipment varies by region.

Interested in this unit? Ask for an offer →

Mute © 2026 All rights reserved

Partitions

Free-standing dividers that bring flexibility and privacy to any workspace. Partitions define zones, enhance privacy, and reduce noise while eliminating the need for permanent walls. Easy to move and reconfigure, they help maximize space utilization and give teams control over their environment.

Mute © 2026 All rights reserved

Modular | MUTE.

Name	Function	Room type	Modular size
Support 2x0,5 v1.O	Support	Open	2x0,5

Not stand-alone

Dimensions

216 x 64,5 x 238 / 226 cm
85.04 x 25.39 x 93.7 / 88.97 in.

Description

This room for facilitating office work provides space and functionality. It's equipped with dedicated furniture and accessories, finished with third-party fit-outs.

It is a part of Modular Support set – multi-functional areas created for back-office functions such as storage, cloakroom, coffee corner, or copy point.

Colors

Construction

4x	solid wall module
1x	electric ceiling module
1x	solid ceiling module
1x	power distribution unit
√	control panel
√	integrated LED lamp

System furniture and accessories

2x	deep shelf
1x	deep shelf with right bookend
2x	sliding door cabinet

Moon White

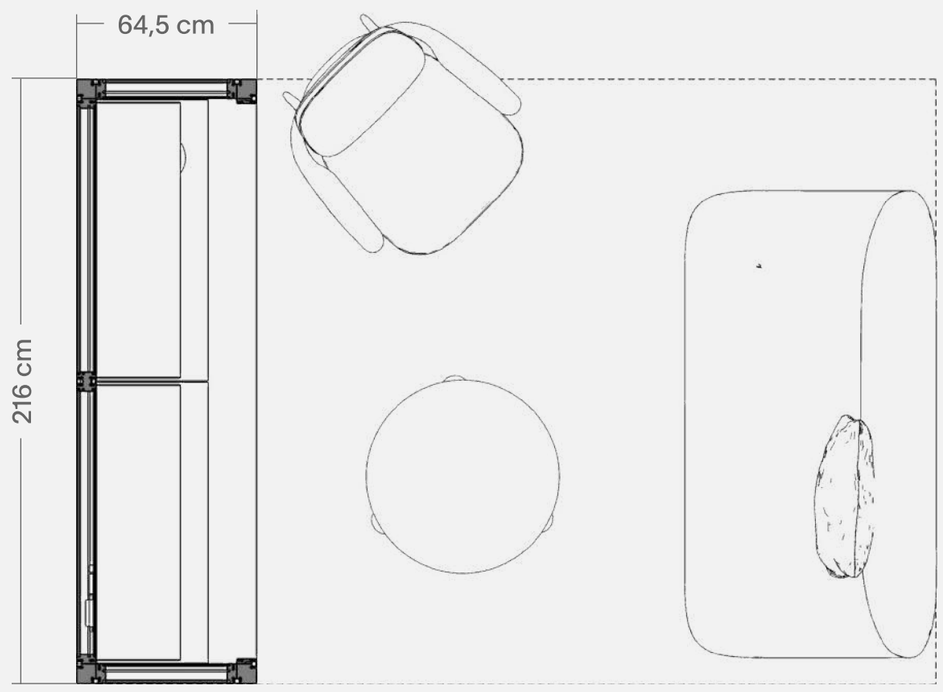

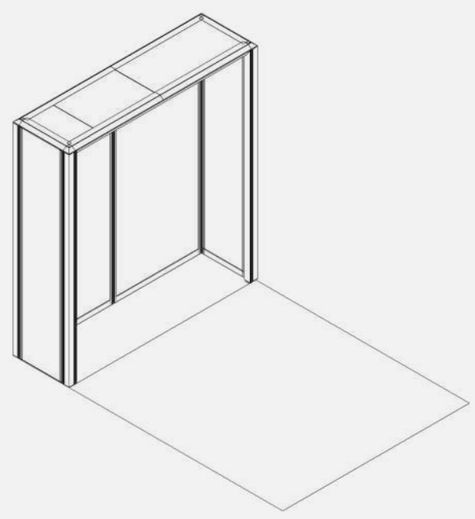

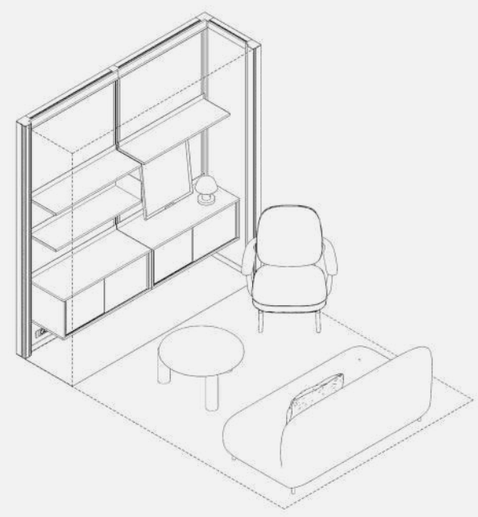

This visualization contains 3rd party products which are purely examplary and are not sold by Mute.
Presets like the one specified in this card can be combined into multifunctional hubs.
Elements of Mute Modular system may change. Availability of finishes and equipment varies by region.

Interested in this unit? Ask for an offer →

Mute © 2026 All rights reserved

Modular | MUTE.

Name	Function	Room type	Modular size
Support 2x0,5 v2.O	Support	Open	2x0,5

Not stand-alone

Dimensions

216 x 64,5 x 238 / 226 cm
85.04 x 25.39 x 93.7 / 88.97 in.

Description

This room for facilitating office work provides space and functionality. It's equipped with dedicated furniture and accessories, finished with third-party fit-outs.

It is a part of Modular Support set – multi-functional areas created for back-office functions such as storage, cloakroom, coffee corner, or copy point.

Colors

Construction

4x	solid wall module
1x	electric ceiling module
1x	solid ceiling module
2x	power distribution unit
√	control panel
√	integrated LED lamp

System furniture and accessories

2x	sliding door cabinet
1x	TV hanger - one profile

Ink Blue

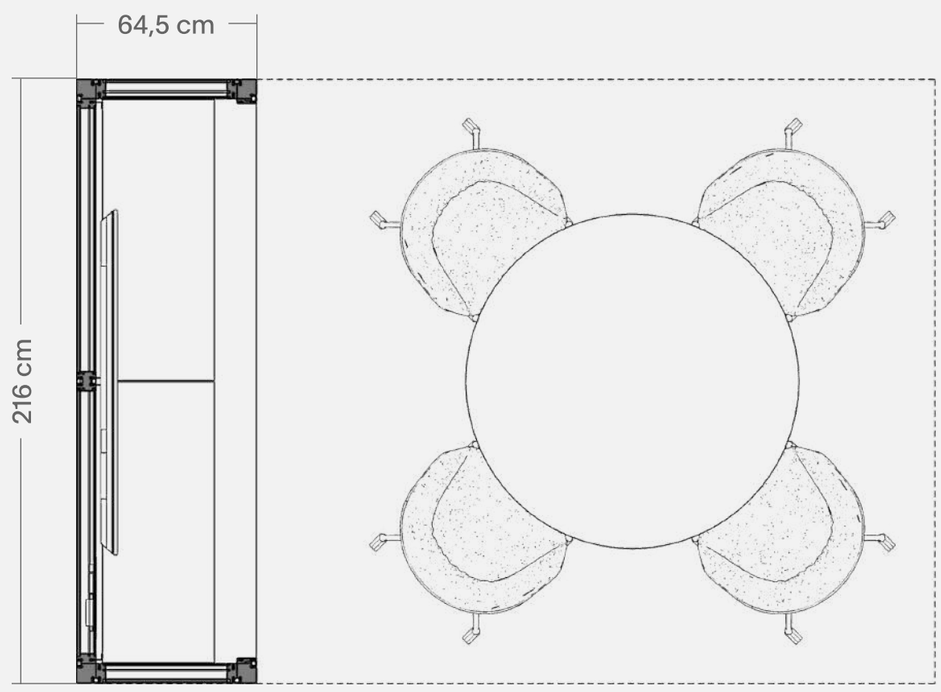

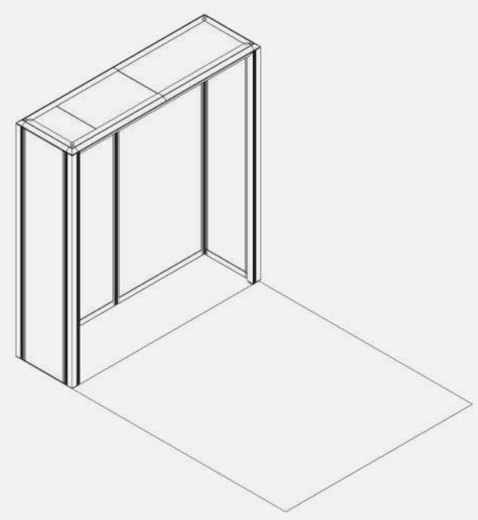

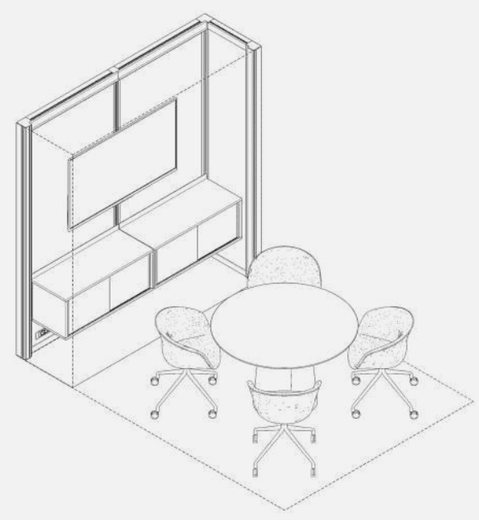

This visualization contains 3rd party products which are purely examplary and are not sold by Mute.
Presets like the one specified in this card can be combined into multifunctional hubs.
Elements of Mute Modular system may change. Availability of finishes and equipment varies by region.

Interested in this unit? Ask for an offer →

Mute © 2026 All rights reserved

Modular | MUTE.

Name	Function	Room type	Modular size
Lounge 2x1 p2.v1.O	Lounge	Open	2x1

Dimensions

216 x 115 x 238 / 226 cm
85.04 x 45.28 x 93.7 / 88.97 in.

Description

This room for relaxing provides space for two people. It's equipped with dedicated furniture and accessories, finished with third-party fit-outs.

It is a part of Modular Lounge set – cozy areas for less-formal meet-ups and every casual occasion. Perfect for a waiting lounge, chill-out area, or gaming room.

Colors

Construction

4x	solid wall module
1x	electric ceiling module
1x	solid ceiling module
2x	power distribution unit
√	control panel
√	integrated LED lamp

System furniture and accessories

1x	deep shelf
1x	display rail

Ink Blue

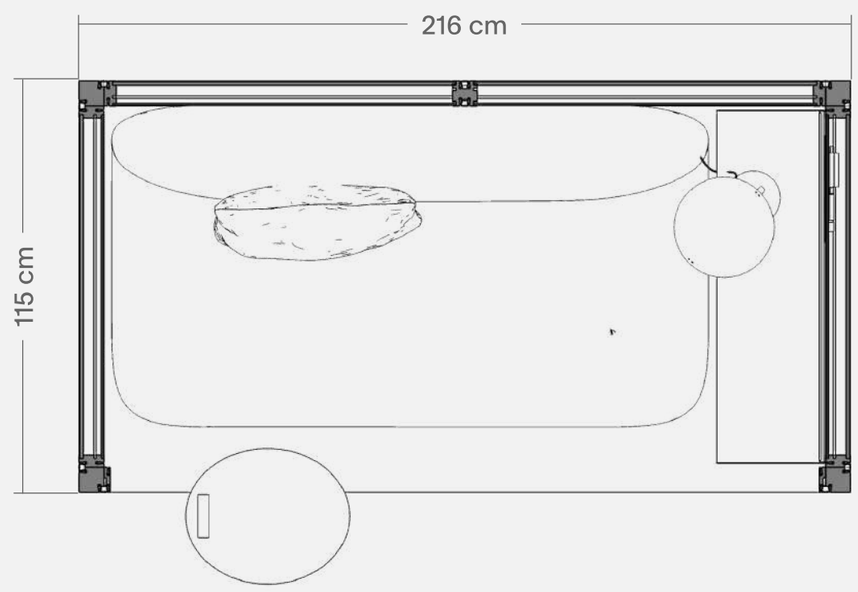

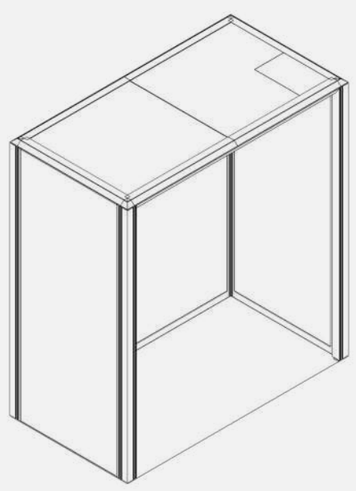

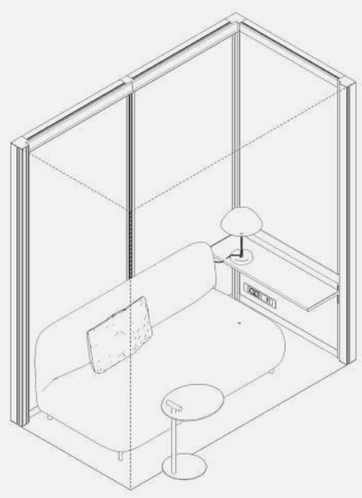

This visualization contains 3rd party products which are purely examplary and are not sold by Mute.
Presets like the one specified in this card can be combined into multifunctional hubs.
Elements of Mute Modular system may change. Availability of finishes and equipment varies by region.

Interested in this unit? Ask for an offer →

Mute © 2026 All rights reserved

Modular | MUTE.

Name	Function	Room type	Modular size
Meet 2x1 p2.v1.0	Meet	Open	2x1

Dimensions

216 x 115 x 238 / 226 cm
85.04 x 45.28 x 93.7 / 88.97 in.

Description

This room for meetups provides space up to 2 people. It's equipped with dedicated furniture and accessories, finished with third-party fit-outs.

It is a part of Mute Modular Meet set – areas in plenty of sizes and capacities to host any gathering: team meet-ups, brainstorms, workshops, small talks, and more.

Colors

Construction

4x	solid wall module
1x	electric ceiling module
1x	solid ceiling module
1x	power distribution unit
√	control panel
√	integrated LED lamp

System furniture and accessories

2x	shallow shelf
2x	display rail
1x	magnet (2 pcs)

Sage Green

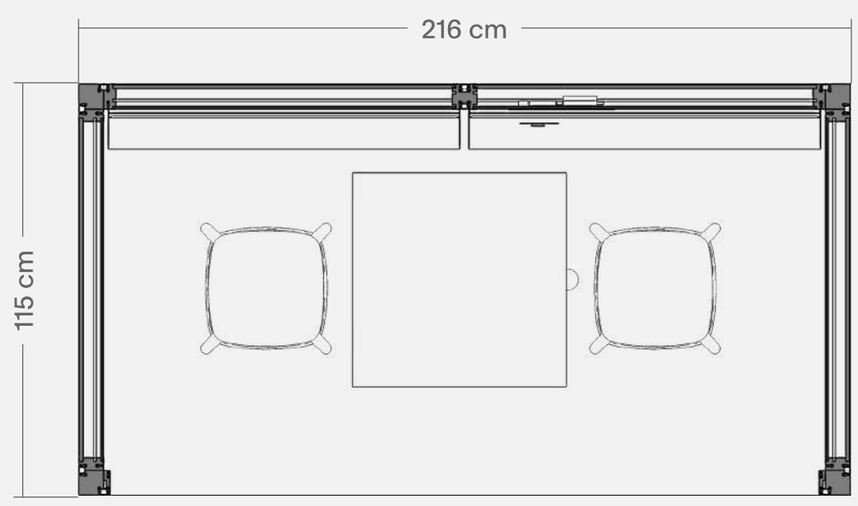

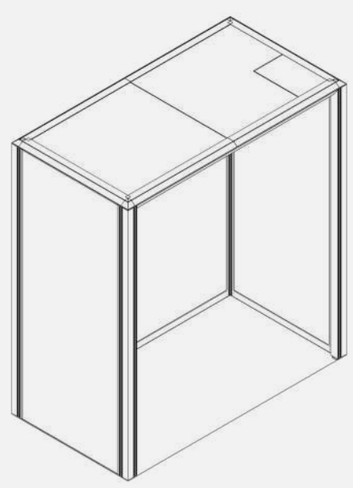

This visualization contains 3rd party products which are purely examplary and are not sold by Mute.
Presets like the one specified in this card can be combined into multifunctional hubs.
Elements of Mute Modular system may change. Availability of finishes and equipment varies by region.

Interested in this unit? Ask for an offer →

Mute © 2026 All rights reserved

Modular | MUTE.

Name	Function	Room type	Modular size
Support 2x1 v1.O	Support	Open	2x1

Dimensions

216 x 115 x 238 / 226 cm
85.04 x 45.28 x 93.7 / 88.97 in.

Description

This room for facilitating office work provides space and functionality. It's equipped with dedicated furniture and accessories, finished with third-party fit-outs.

It is a part of Modular Support set – multi-functional areas created for back-office functions such as storage, cloakroom, coffee corner, or copy point.

Colors

Construction

4x	solid wall module
1x	electric ceiling module
1x	solid ceiling module
1x	power distribution unit
√	control panel
√	integrated LED lamp

System furniture and accessories

2x	deep shelf with rail
√	curtain rail
√	curtain

Sand Beige

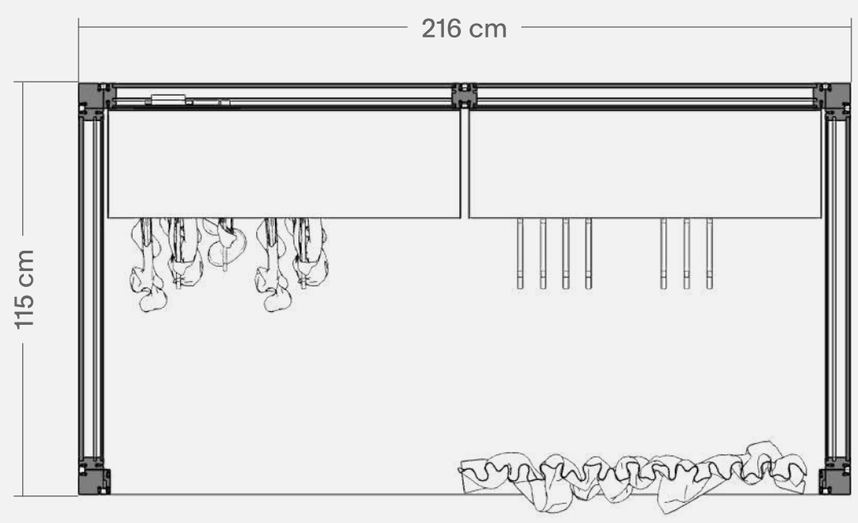

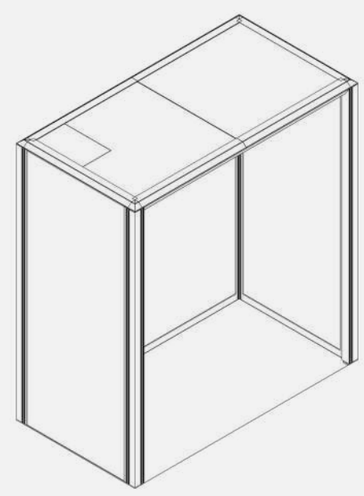

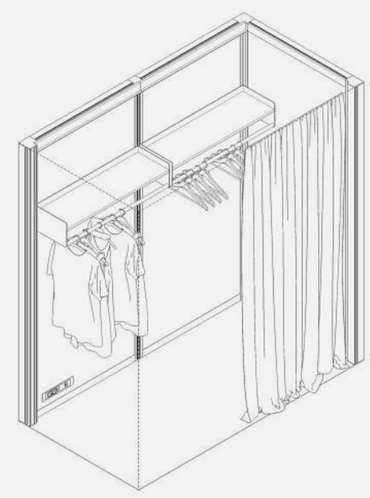

This visualization contains 3rd party products which are purely examplary and are not sold by Mute.
Presets like the one specified in this card can be combined into multifunctional hubs.
Elements of Mute Modular system may change. Availability of finishes and equipment varies by region.

Interested in this unit? Ask for an offer →

Mute © 2026 All rights reserved

Modular | MUTE.

Name	Function	Room type	Modular size
Work 2x1 p1.v2.O	Work	Open	2x1

Dimensions

216 x 115 x 238 / 226 cm
85.04 x 45.28 x 93.7 / 88.97 in.

Description

This room for individual work provides space and calm for one person. It's equipped with dedicated furniture and accessories, finished with third-party fit-outs.

It is a part of Modular Work set – areas designed purposefully to offer comfort and privacy for the individual, focused work, or small collaborative sessions.

Colors

Construction

4x	solid wall module
1x	slatted wall module
1x	electric ceiling module
1x	solid ceiling module
1x	power distribution unit
√	control panel
√	integrated LED lamp

System furniture and accessories

1x	desk
1x	whiteboard
1x	display rail
1x	phone holder
2x	magnet (2 pcs)
2x	wall hook

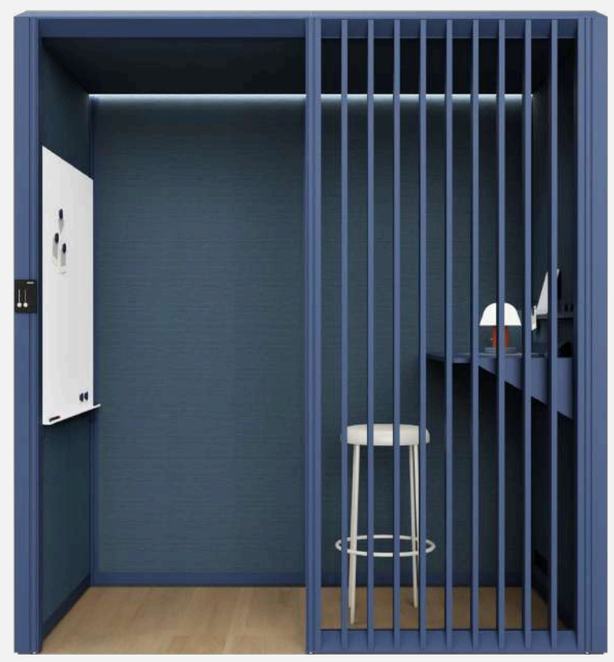

Ink Blue

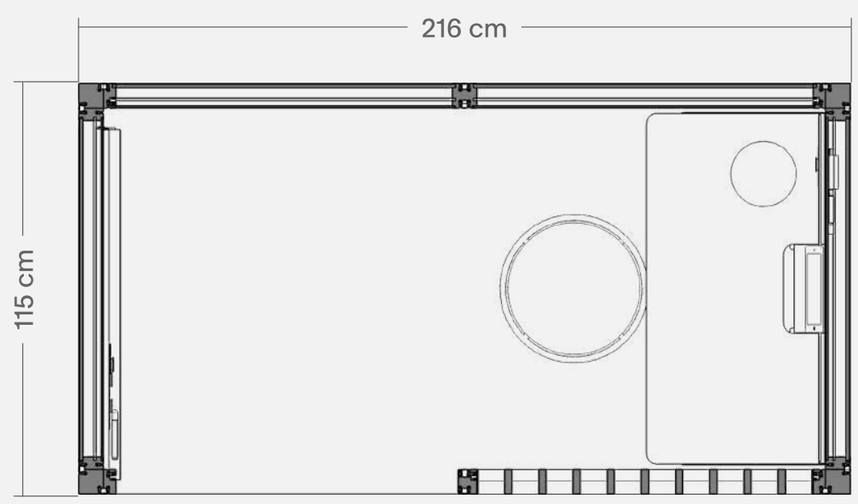

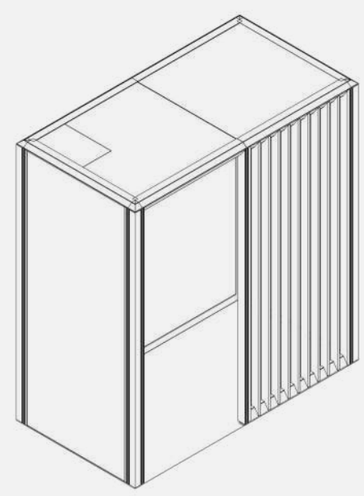

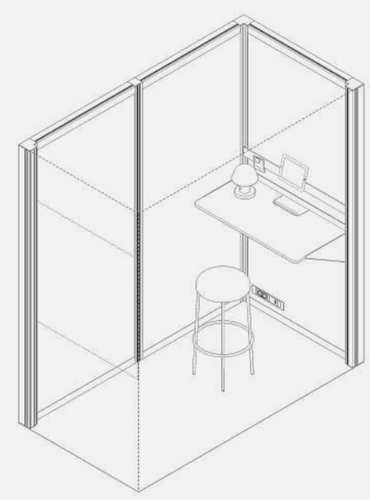

This visualization contains 3rd party products which are purely examplary and are not sold by Mute.
Presets like the one specified in this card can be combined into multifunctional hubs.
Elements of Mute Modular system may change. Availability of finishes and equipment varies by region.

Interested in this unit? Ask for an offer →

Mute © 2026 All rights reserved

Modular | MUTE.

Name	Function	Room type	Modular size
Work 2x1 p2.v1.O	Work	Open	2x1

Dimensions

216 x 115 x 238 / 226 cm
85.04 x 45.28 x 93.7 / 88.97 in.

Description

This room for collaborative work provides space and calm for two people. It's equipped with dedicated furniture and accessories, finished with third-party fit-outs.

It is a part of Modular Work set – areas designed purposefully to offer comfort and privacy for the individual, focused work, or small collaborative sessions.

Colors

Construction

4x	solid wall module
1x	electric ceiling module
1x	solid ceiling module
2x	power distribution unit
√	control panel
√	integrated LED lamp

System furniture and accessories

2x	desk
2x	shallow shelf
2x	display rail
2x	magnet (2 pcs)
2x	wall hook

Sand Beige

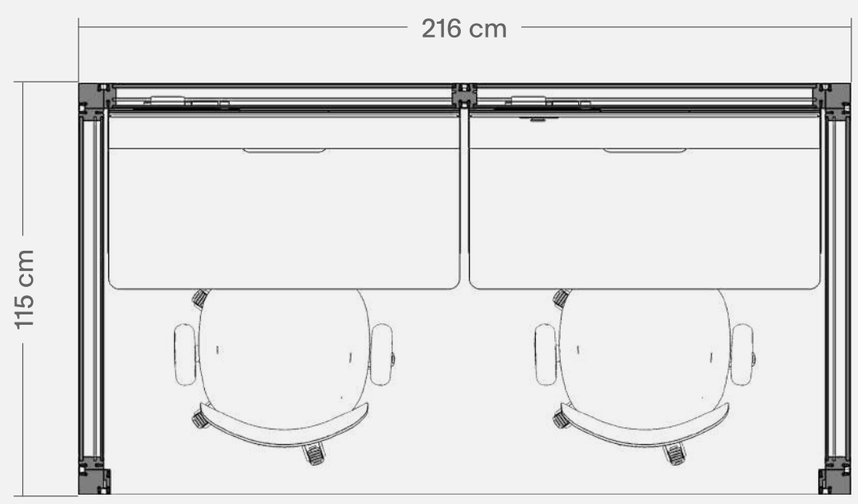

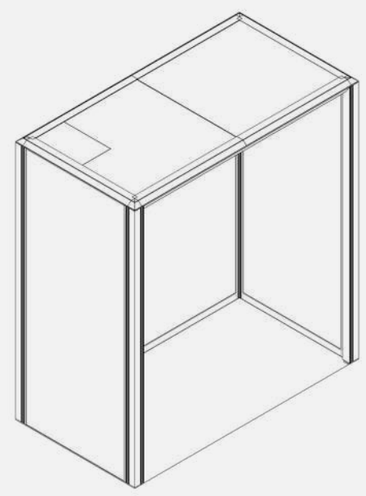

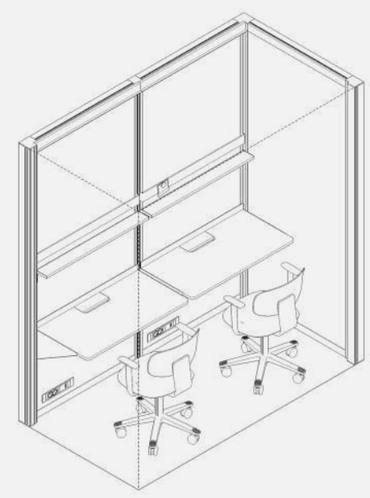

This visualization contains 3rd party products which are purely examplary and are not sold by Mute.
Presets like the one specified in this card can be combined into multifunctional hubs.
Elements of Mute Modular system may change. Availability of finishes and equipment varies by region.

Interested in this unit? Ask for an offer →

Mute © 2026 All rights reserved

Modular | MUTE.

Name	Function	Room type	Modular size
Work 2x1 p2.v2.O	Work	Open	2x1

Dimensions

216 x 115 x 238 / 226 cm
85.04 x 45.28 x 93.7 / 88.97 in.

Description

This room for collaborative work provides space and calm for two people. It's equipped with dedicated furniture and accessories, finished with third-party fit-outs.

It is a part of Modular Work set – areas designed purposefully to offer comfort and privacy for the individual, focused work, or small collaborative sessions.

Colors

Construction

4x	solid wall module
1x	electric ceiling module
1x	solid ceiling module
2x	power distribution unit
√	control panel
√	integrated LED lamp

System furniture and accessories

2x	desk
2x	display rail
2x	magnet (2 pcs)
2x	wall hook
2x	phone holder

Ash Gray

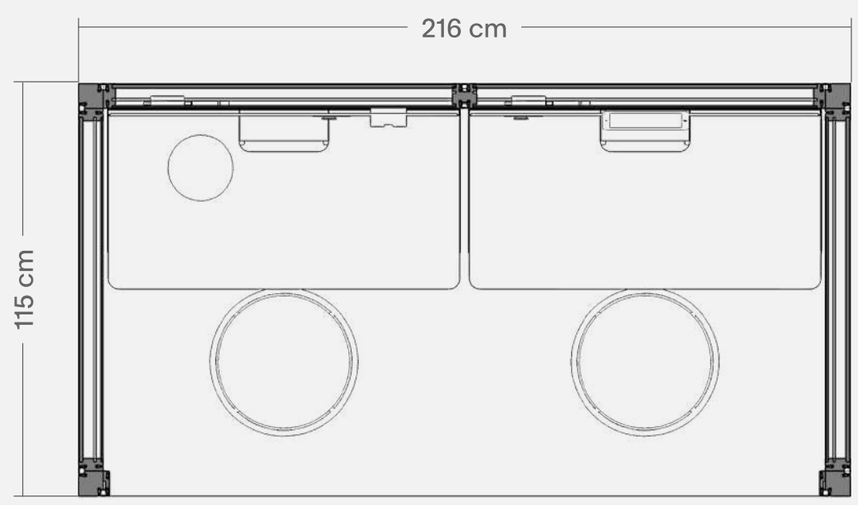

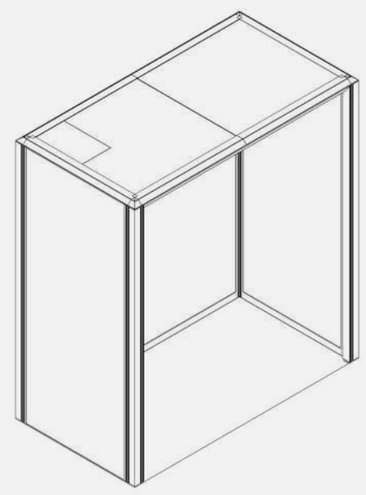

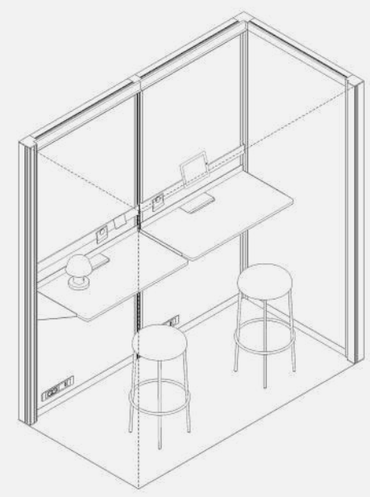

This visualization contains 3rd party products which are purely examplary and are not sold by Mute.
Presets like the one specified in this card can be combined into multifunctional hubs.
Elements of Mute Modular system may change. Availability of finishes and equipment varies by region.

Interested in this unit? Ask for an offer →

Mute © 2026 All rights reserved

Modular | MUTE.

Name	Function	Room type	Modular size
Support 2x2 v1.0	Support	Open	2x2

Dimensions

216 x 216 x 238 / 226 cm
85.04 x 85.04 x 93.7 / 88.97 in.

Description

This room for facilitating office work provides space with optional seating desk for one person. It's equipped with dedicated furniture and accessories, finished with third-party fit-outs.

It is a part of Modular Support set – multi-functional areas created for back-office functions such as storage, cloakroom, coffee corner, or copy point.

Colors

Construction

6x	solid wall module
1x	electric ceiling module
3x	solid ceiling module
1x	power distribution unit
2x	Flask track lighting
√	control panel
√	integrated LED lamp

System furniture and accessories

1x	desk
3x	deep shelf with bookends
√	curtain rail
√	curtain

Ash Gray

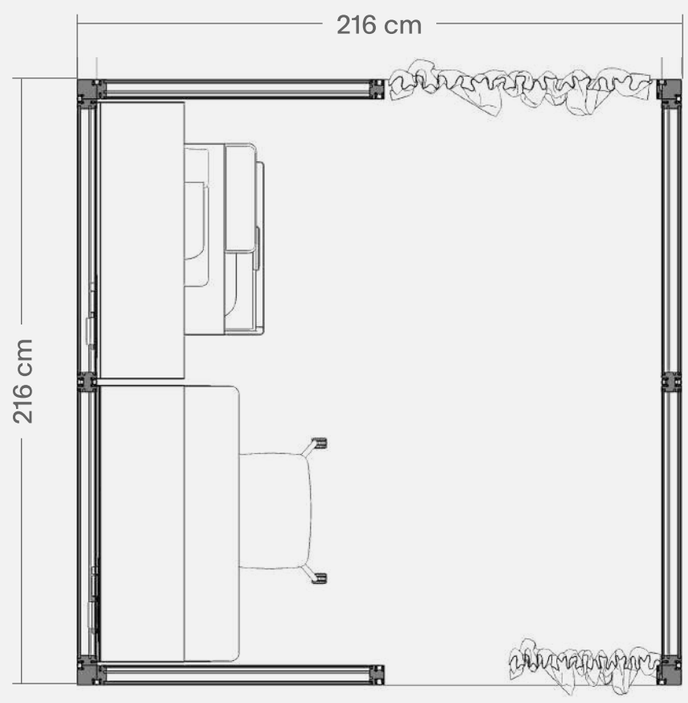

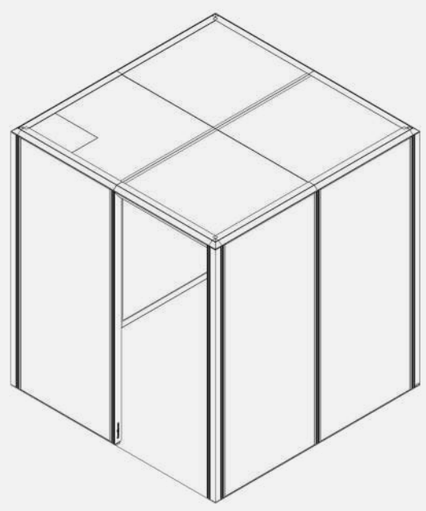

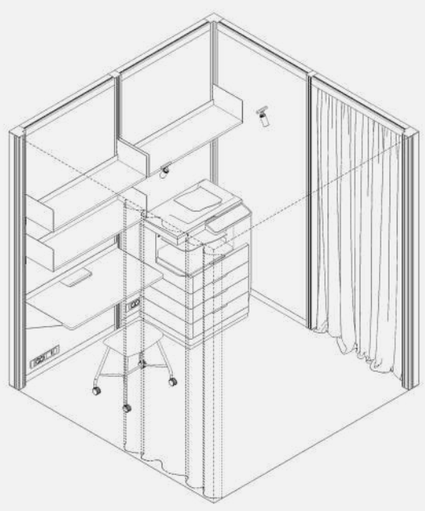

This visualization contains 3rd party products which are purely examplary and are not sold by Mute.
Presets like the one specified in this card can be combined into multifunctional hubs.
Elements of Mute Modular system may change. Availability of finishes and equipment varies by region.

Interested in this unit? Ask for an offer →

Mute © 2026 All rights reserved

Modular | MUTE.

Name	Function	Room type	Modular size
Work 2x2 p2.v2.O	Work	Open	2x2

Dimensions

216 x 216 x 238 / 226 cm
85.04 x 85.04 x 93.7 / 88.97 in.

Description

This room for collaborative work provides space and calm for two people. It's equipped with dedicated furniture and accessories, finished with third-party fit-outs.

It is a part of Modular Work set – areas designed purposefully to offer comfort and privacy for the individual, focused work, or small collaborative sessions.

Colors

Construction

4x	solid wall module
2x	slatted wall module
1x	electric ceiling module
3x	solid ceiling module
2x	power distribution unit
2x	Flask track lighting
√	control panel
√	integrated LED lamp

System furniture and accessories

2x	desk
2x	deep shelf with bookends
2x	whiteboard
2x	display rail
4x	magnet (2 pcs)
2x	wall hook

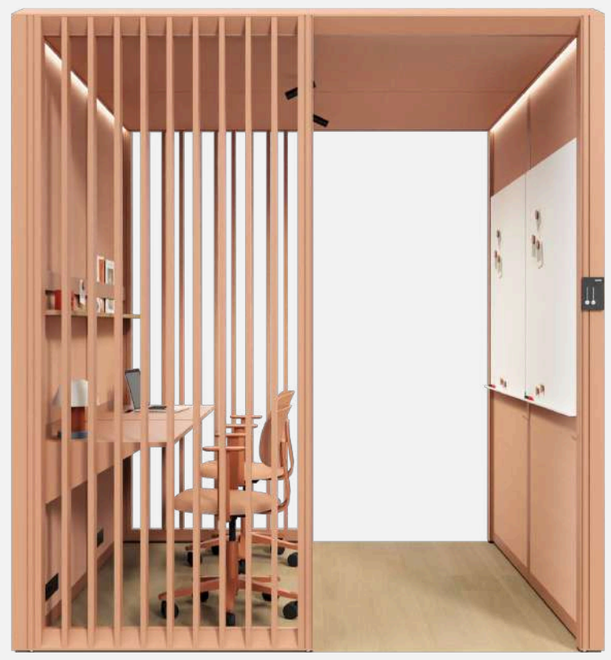

Clay Red

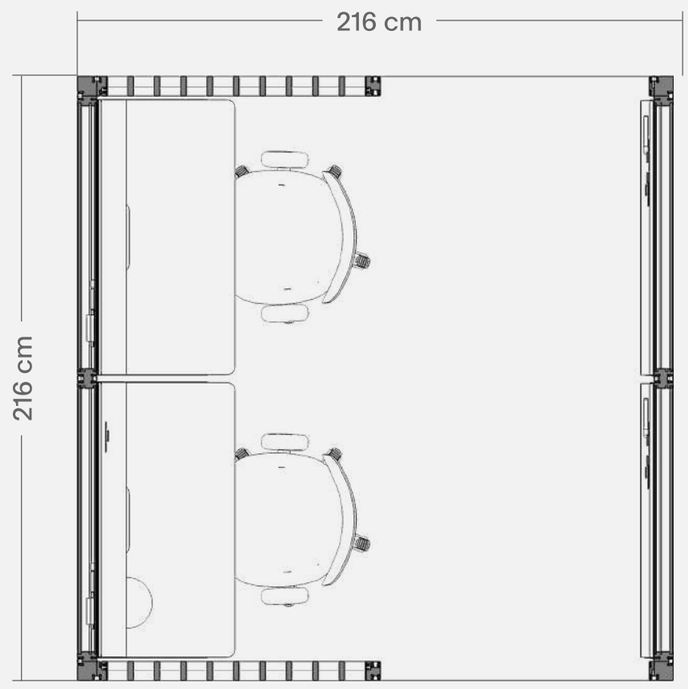

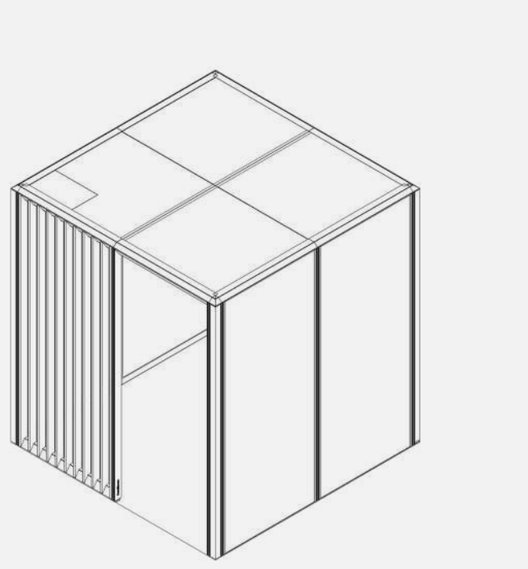

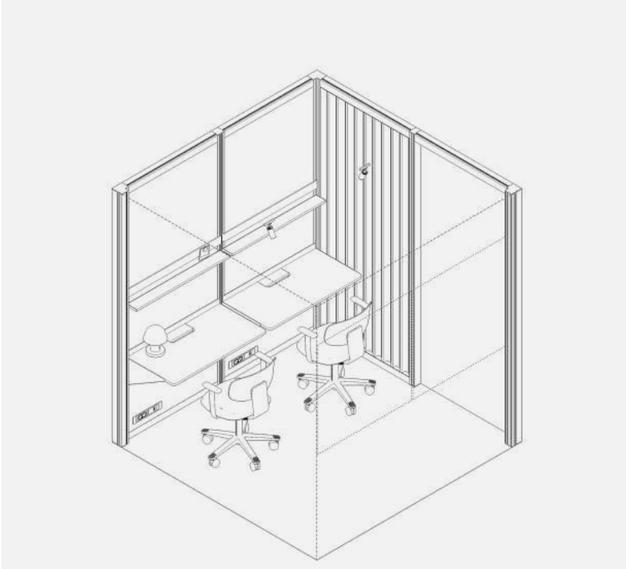

This visualization contains 3rd party products which are purely examplary and are not sold by Mute.
Presets like the one specified in this card can be combined into multifunctional hubs.
Elements of Mute Modular system may change. Availability of finishes and equipment varies by region.

Interested in this unit? Ask for an offer →

Mute © 2026 All rights reserved

Modular | MUTE.

Name	Function	Room type	Modular size
Lounge 2x3 p2.v1.0	Lounge	Open	2x3

Dimensions

216 x 317 x 238 / 226 cm
85.04 x 124.8 x 93.7 / 88.97 in.

Description

This room for relaxing provides space for two people. It's equipped with dedicated furniture and accessories, finished with third-party fit-outs.

It is a part of Modular Lounge set – cozy areas for less-formal meet-ups and every casual occasion. Perfect for a waiting lounge, chill-out area, or gaming room.

Colors

Construction

6x	solid wall module
2x	slatted wall module
1x	electric ceiling module
5x	solid ceiling module
2x	power distribution unit
3x	Flask track lighting
√	integrated linear lamp
√	control panel

System furniture and accessories

3x	shallow shelf
1x	TV hanger
3x	display rail
1x	magnet (2 pcs)
2x	wall hook

Sage Green

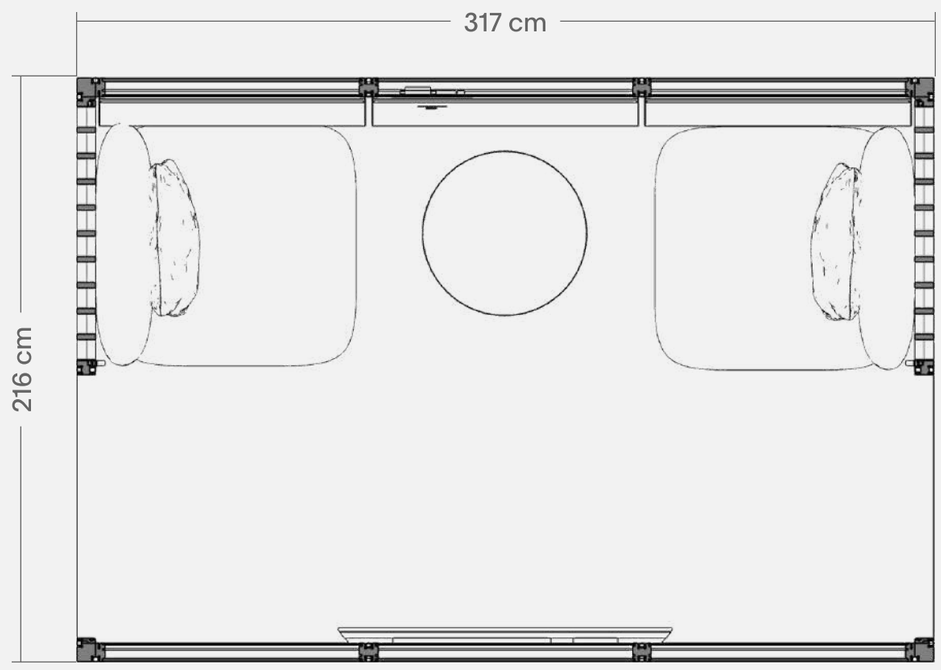

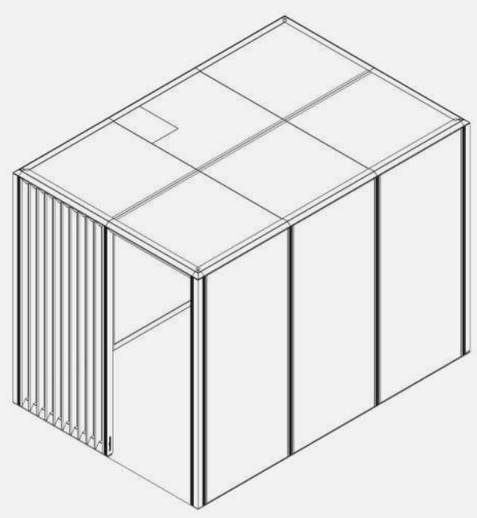

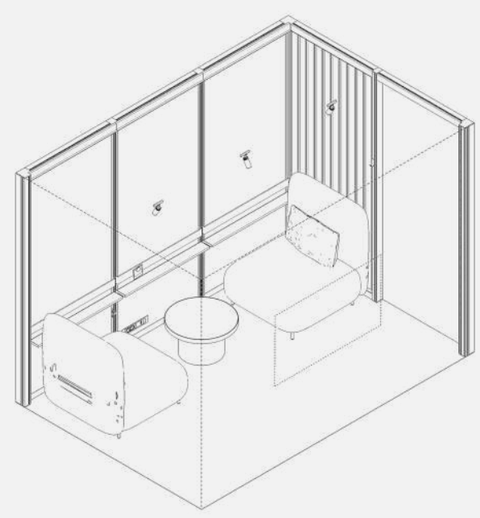

This visualization contains 3rd party products which are purely examplary and are not sold by Mute.
Presets like the one specified in this card can be combined into multifunctional hubs.
Elements of Mute Modular system may change. Availability of finishes and equipment varies by region.

Interested in this unit? Ask for an offer →

Mute © 2026 All rights reserved

Modular | MUTE.

Name	Function	Room type	Modular size
Support 3x0,5 v1.O	Support	Open	3x0,5

Not stand-alone

Dimensions

317 x 64,5 x 238 / 226 cm
124.8 x 25.39 x 93.7 / 88.97 in.

Description

This room for facilitating office work provides space and functionality. It's equipped with dedicated furniture and accessories, finished with third-party fit-outs.

It is a part of Modular Support set – multi-functional areas created for back-office functions such as storage, cloakroom, coffee corner, or copy point.

Colors

Construction

5x	solid wall module
1x	electric ceiling module
2x	solid ceiling module
1x	power distribution unit
√	control panel
√	integrated LED lamp

System furniture and accessories

4x	deep shelf
1x	open shelf cabinet
2x	sliding door cabinet
1x	deep shelf with right bookend
2x	display stand

Clay Red

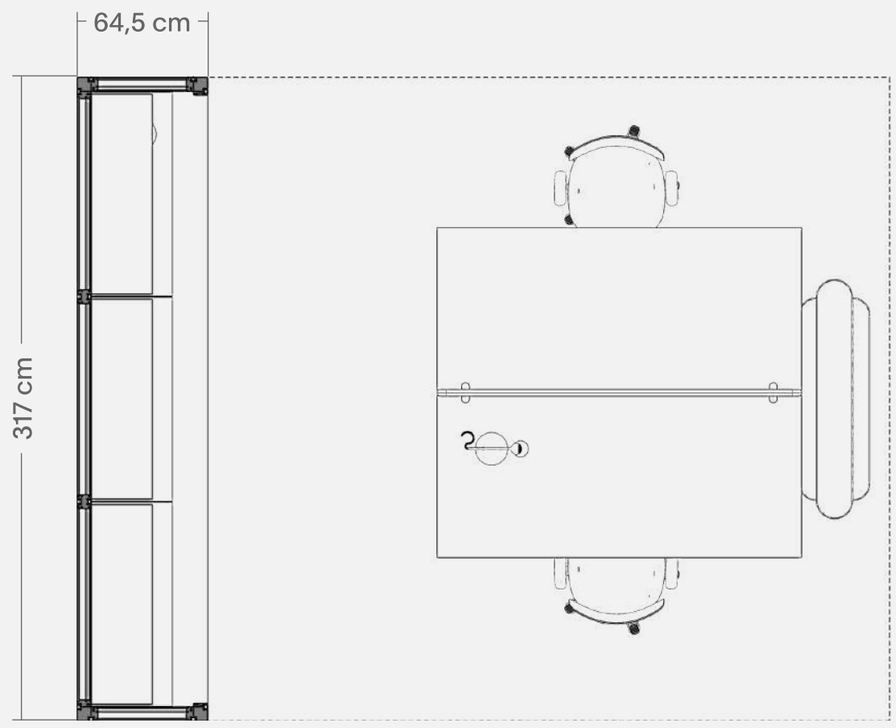

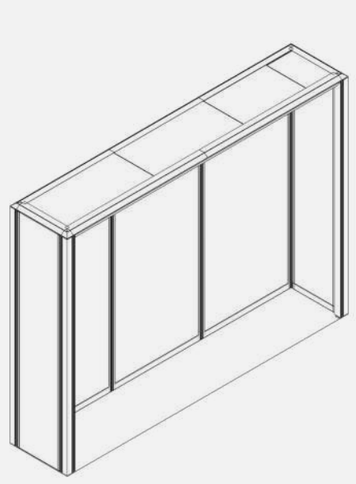

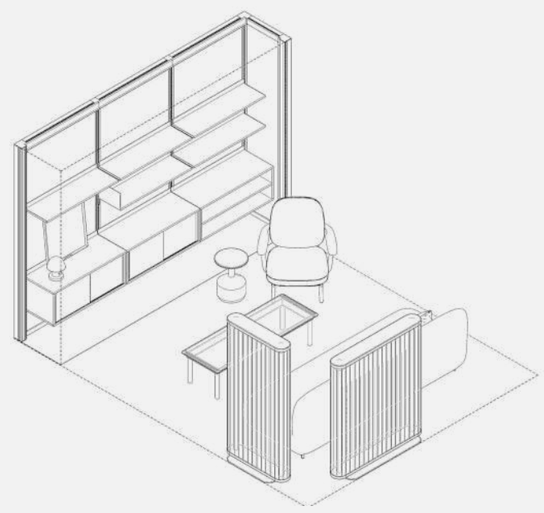

This visualization contains 3rd party products which are purely examplary and are not sold by Mute.
Presets like the one specified in this card can be combined into multifunctional hubs.
Elements of Mute Modular system may change. Availability of finishes and equipment varies by region.

Interested in this unit? Ask for an offer →

Mute © 2026 All rights reserved

Modular | MUTE.

Name	Function	Room type	Modular size
Lounge 3x1 p2.v1.O	Lounge	Open	3x1

Dimensions

317 x 115 x 238 / 226 cm
124.8 x 45.28 x 93.7 / 88.97 in.

Description

This room for relaxing provides space up to 2 people. It's equipped with dedicated furniture and accessories, finished with third-party fit-outs.

It is a part of Modular Lounge set – cozy areas for less-formal meet-ups and every casual occasion. Perfect for a waiting lounge, chill-out area, or gaming room.

Colors

Construction

3x	solid wall module
2x	perforated metal wall module
1x	electric ceiling module
2x	solid ceiling module
1x	power distribution unit
√	control panel
√	integrated linear lamp

System furniture and accessories

3x	shallow shelf
2x	display rail
1x	magnet (2 pcs)
2x	wall hook
1x	display stand

Sand Beige

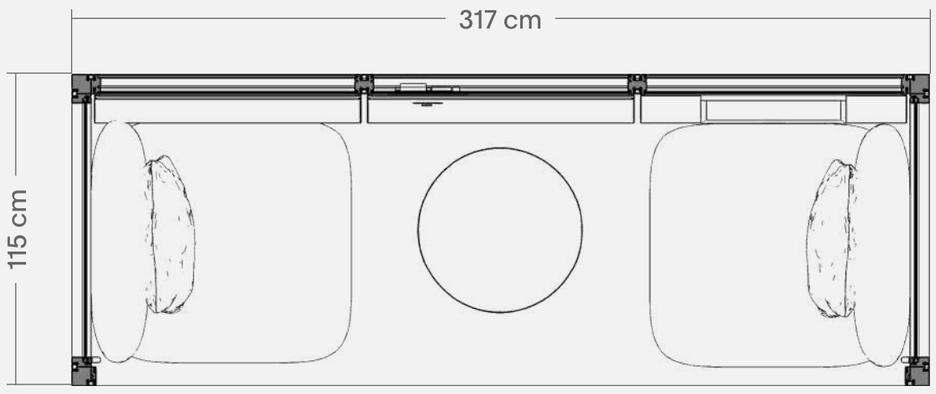

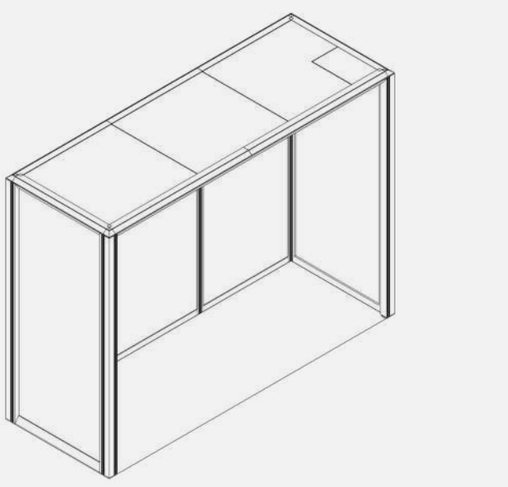

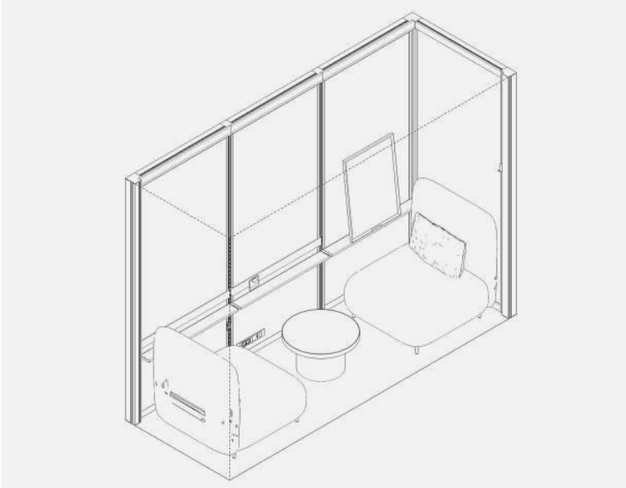

This visualization contains 3rd party products which are purely examplary and are not sold by Mute.
Presets like the one specified in this card can be combined into multifunctional hubs.
Elements of Mute Modular system may change. Availability of finishes and equipment varies by region.

Interested in this unit? Ask for an offer →

Mute © 2026 All rights reserved

Modular | MUTE.

Name	Function	Room type	Modular size
Lounge 3x1 p4.v1.O	Lounge	Open	3x1

Dimensions

317 x 115 x 238 / 226 cm
124.8 x 45.28 x 93.7 / 88.97 in.

Description

This room for relaxing provides space for four people. It's equipped with dedicated furniture and accessories, finished with third-party fit-outs.

It is a part of Modular Lounge set – cozy areas for less-formal meet-ups and every casual occasion. Perfect for a waiting lounge, chill-out area, or gaming room.

Colors

Construction

3x	solid wall module
2x	perforated metal wall module
1x	electric ceiling module
2x	solid ceiling module
2x	power distribution unit
√	control panel
√	integrated linear lamp

System furniture and accessories

1x	open shelf cabinet
2x	deep drawer cabinet
1x	TV hanger - two profile

Void Black

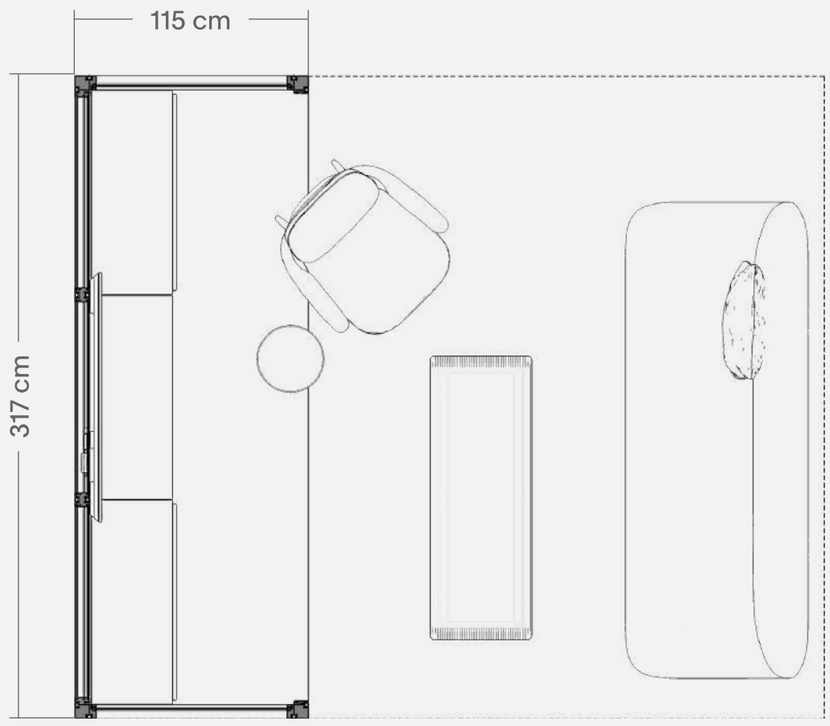

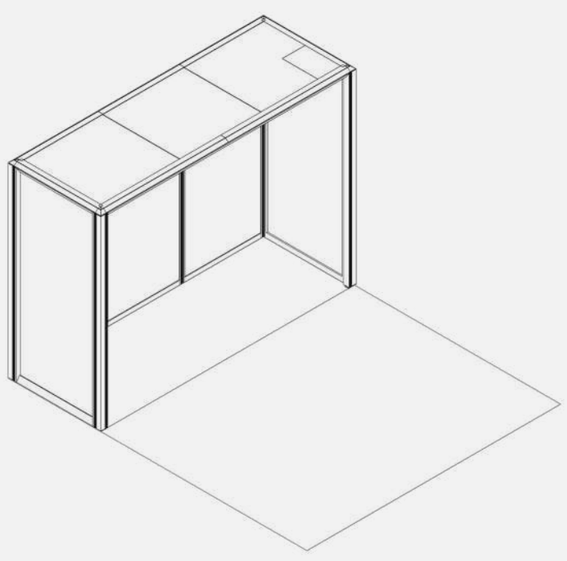

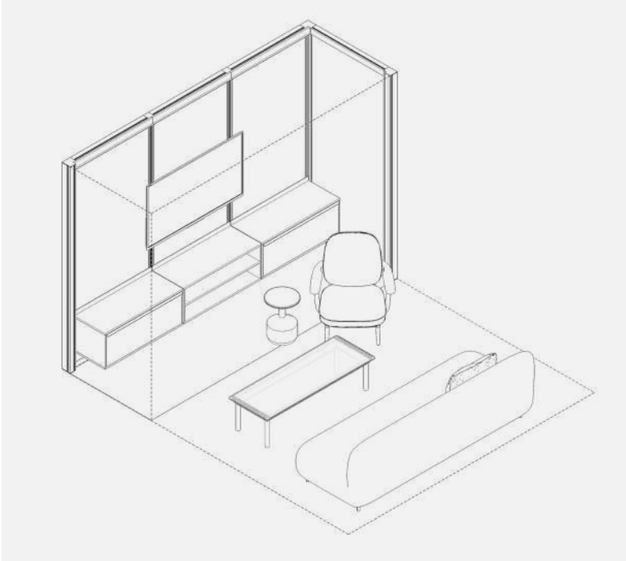

This visualization contains 3rd party products which are purely examplary and are not sold by Mute.
Presets like the one specified in this card can be combined into multifunctional hubs.
Elements of Mute Modular system may change. Availability of finishes and equipment varies by region.

Interested in this unit? Ask for an offer →

Mute © 2026 All rights reserved

Modular | MUTE.

Name	Function	Room type	Modular size
Meet 3x1 p2.v2.O	Meet	Open	3x1

Dimensions

317 x 115 x 238 / 226 cm
124.8 x 45.28 x 93.7 / 88.97 in.

Description

This room for meetups provides space up to 2 people. It's equipped with dedicated furniture and accessories, finished with third-party fit-outs.

It is a part of Mute Modular Meet set – areas in plenty of sizes and capacities to host any gathering: team meet-ups, brainstorms, workshops, small talks, and more.

Colors

Construction

3x	solid wall module
2x	perforated metal wall module
1x	electric ceiling module
2x	solid ceiling module
1x	power distribution unit
√	control panel
√	integrated linear lamp

System furniture and accessories

2x	shallow shelf
1x	table W101xL90
3x	display rail
4x	display rail hook
1x	magnet (2 pcs)
2x	wall hook

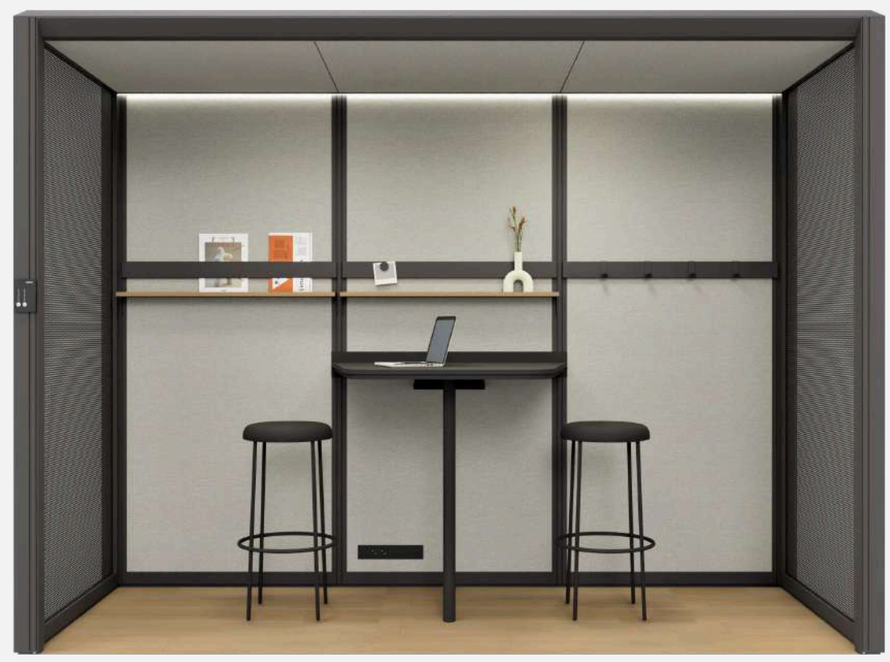

Void Black

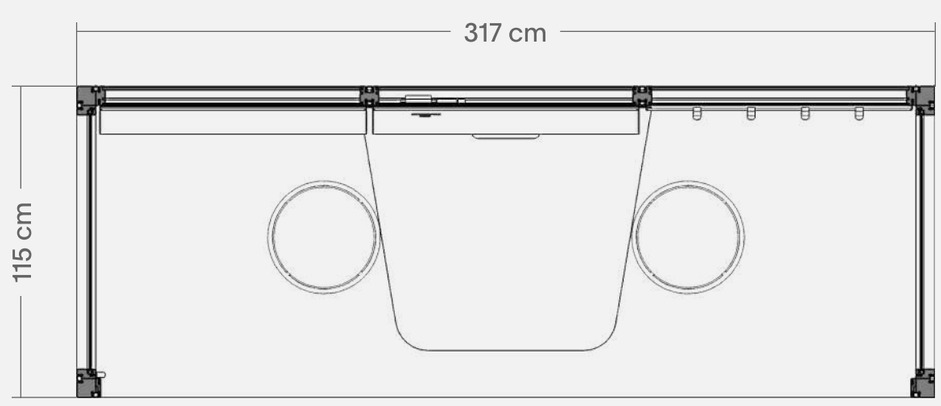

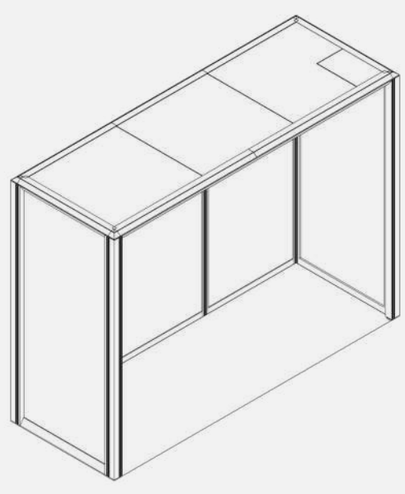

This visualization contains 3rd party products which are purely examplary and are not sold by Mute.
Presets like the one specified in this card can be combined into multifunctional hubs.
Elements of Mute Modular system may change. Availability of finishes and equipment varies by region.

Interested in this unit? Ask for an offer →

Mute © 2026 All rights reserved

Modular | MUTE.

Name	Function	Room type	Modular size
Meet 3x1 p3.v1.O	Meet	Open	3x1

Dimensions

317 x 115 x 238 / 226 cm
124.8 x 45.28 x 93.7 / 88.97 in.

Description

This room for meetups provides space up to 3 people. It's equipped with dedicated furniture and accessories, finished with third-party fit-outs.

It is a part of Modular Meet set – areas in plenty of sizes and capacities to host any gathering: team meet-ups, brainstorms, workshops, small talks, and more.

Colors

Construction

3x	solid wall module
2x	slatted wall module
1x	electric ceiling module
2x	solid ceiling module
2x	power distribution unit
√	control panel
√	integrated linear lamp

System furniture and accessories

1x	table W101xL165
1x	TV hanger - two profile
2x	wall hook
2x	magnet (2 pcs)
1x	whiteboard

Sand Beige

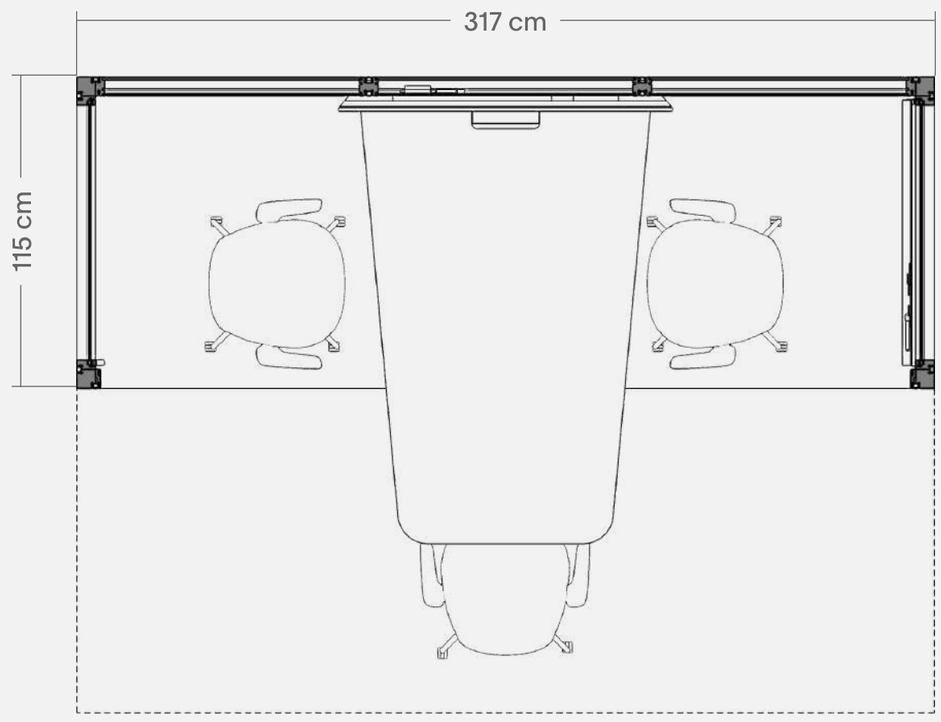

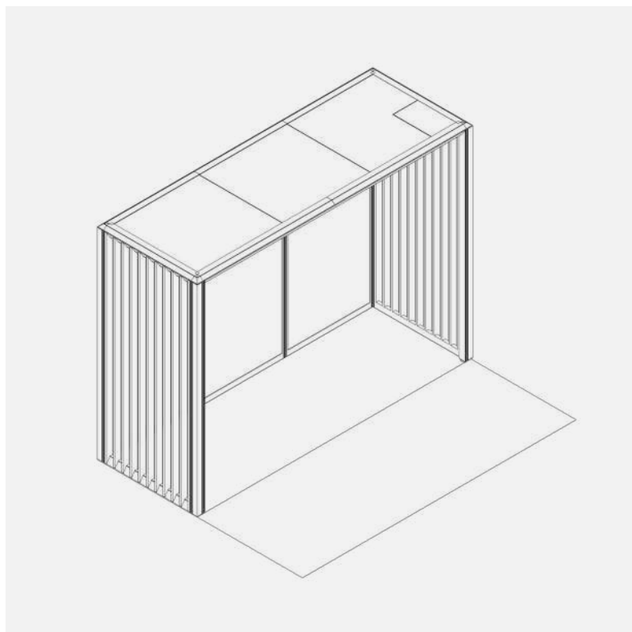

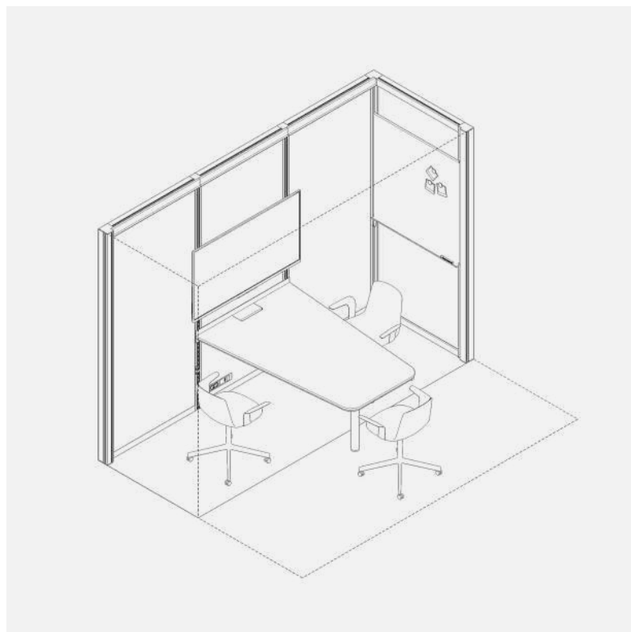

This visualization contains 3rd party products which are purely examplary and are not sold by Mute.
Presets like the one specified in this card can be combined into multifunctional hubs.
Elements of Mute Modular system may change. Availability of finishes and equipment varies by region.

Interested in this unit? Ask for an offer →

Mute © 2026 All rights reserved

Modular | MUTE.

Name	Function	Room type	Modular size
Support 3x1 v1.O	Support	Open	3x1

Dimensions

317 x 115 x 238 / 226 cm
124.8 x 45.28 x 93.7 / 88.97 in.

Description

This room for facilitating office work provides space with optional seating desk for one person. It's equipped with dedicated furniture and accessories, finished with third-party fit-outs.

It is a part of Modular Support set – multi-functional areas created for back-office functions such as storage, cloakroom, coffee corner, or copy point.

Colors

Construction

5x	solid wall module
1x	electric ceiling module
2x	solid ceiling module
2x	power distribution unit
√	control panel
√	integrated linear lamp

System furniture and accessories

1x	desk
3x	deep shelf with bookends
1x	deep shelf with rail
1x	magnet (2 pcs)
2x	wall hook
√	curtain rail
√	curtain

Clay Red

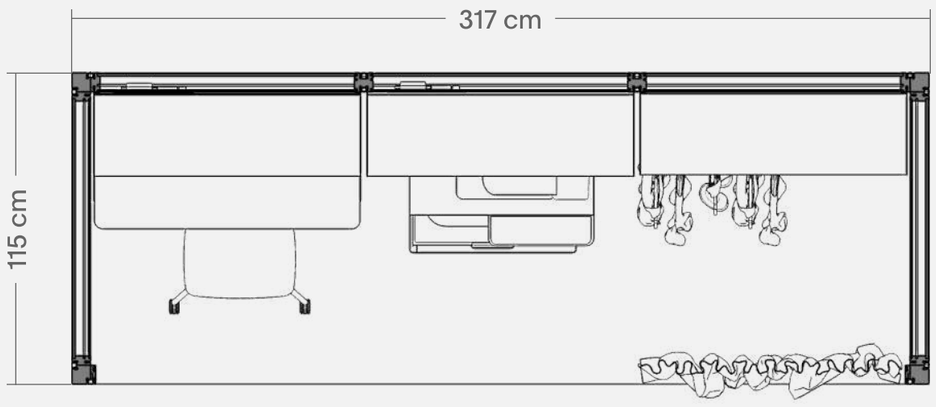

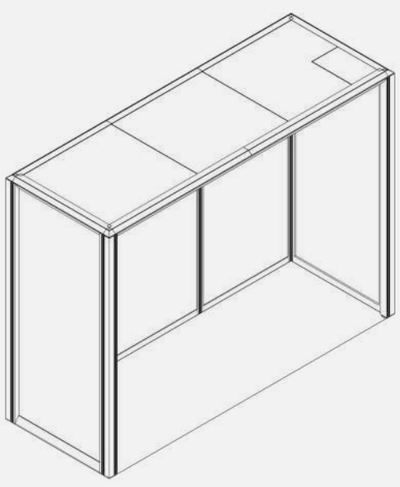

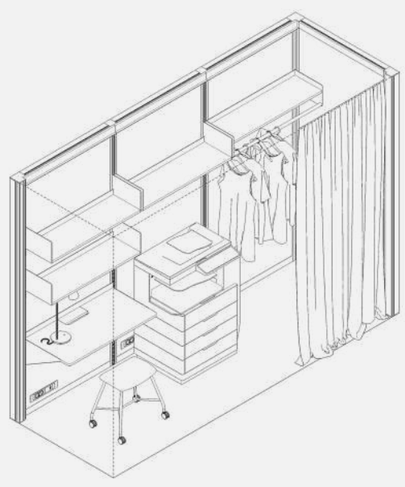

This visualization contains 3rd party products which are purely examplary and are not sold by Mute.
Presets like the one specified in this card can be combined into multifunctional hubs.
Elements of Mute Modular system may change. Availability of finishes and equipment varies by region.

Interested in this unit? Ask for an offer →

Mute © 2026 All rights reserved

Modular | MUTE.

Name	Function	Room type	Modular size
Support 3x1 v2.0	Support	Open	3x1

Dimensions

317 x 115 x 238 / 226 cm
124.8 x 45.28 x 93.7 / 88.97 in.

Description

This room for facilitating office work provides space with optional seating desk for one person. It's equipped with dedicated furniture and accessories, finished with third-party fit-outs.

It is a part of Modular Support set – multi-functional areas created for back-office functions such as storage, cloakroom, coffee corner, or copy point.

Colors

Construction

3x	solid wall module
2x	fluted glass wall module
1x	electric ceiling module
2x	solid ceiling module
1x	power distribution unit
√	control panel
√	integrated linear lamp

System furniture and accessories

1x	shallow shelf
3x	deep shelf, right bookend
4x	deep shelf
1x	display rail
1x	deep drawer cabinet
1x	magnet (2 pcs)
2x	two-drawer cabinet
1x	desk

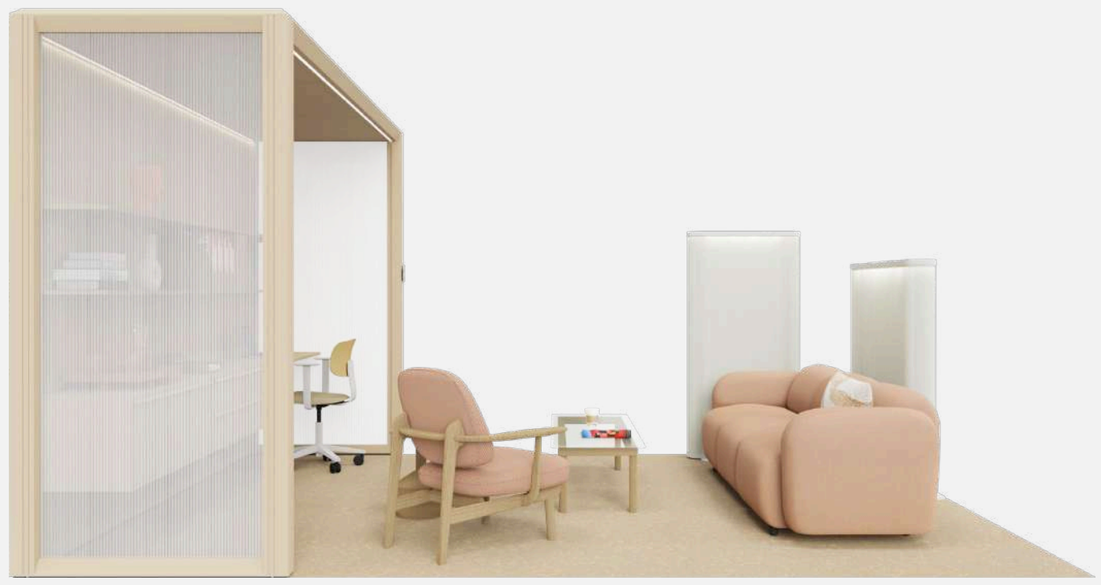

Sand Beige

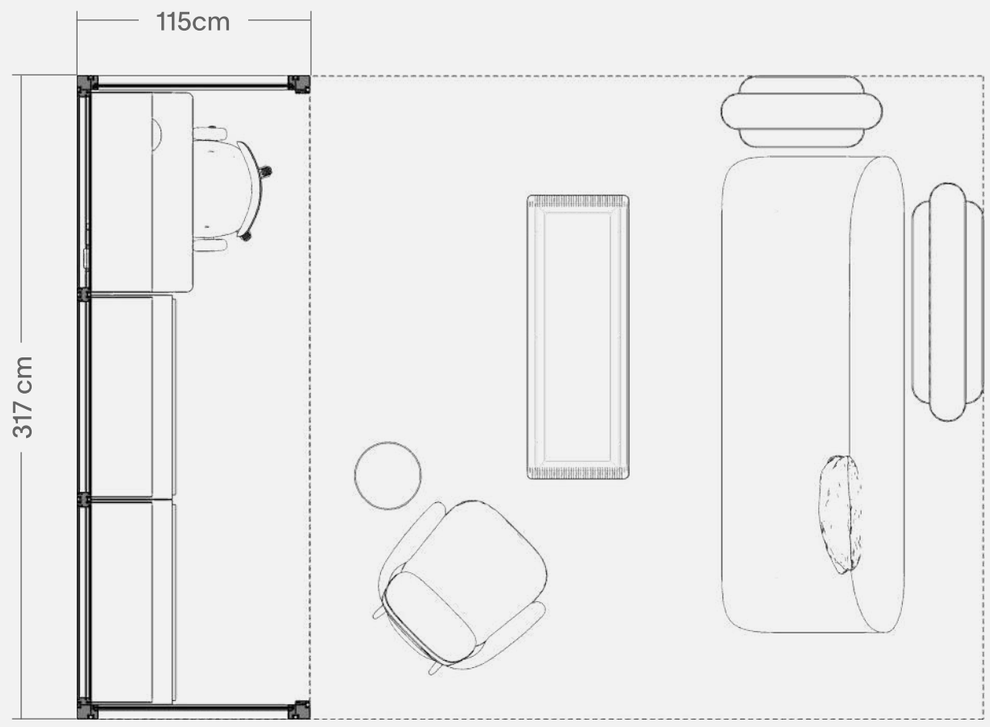

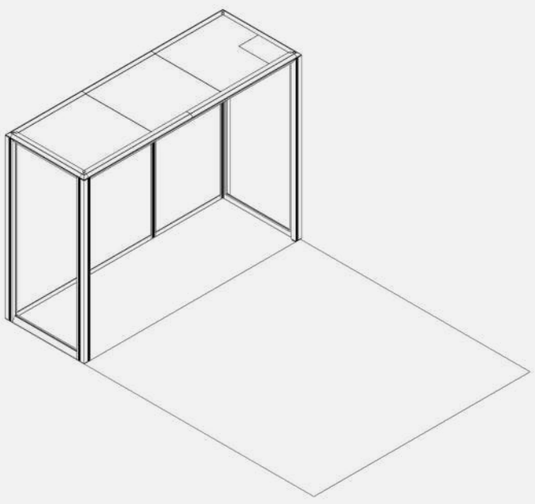

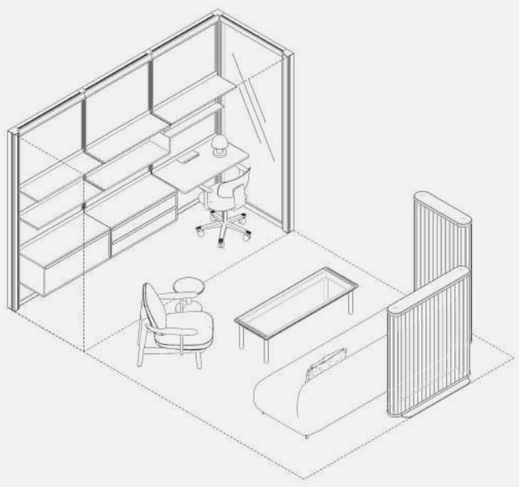

This visualization contains 3rd party products which are purely examplary and are not sold by Mute.
Presets like the one specified in this card can be combined into multifunctional hubs.
Elements of Mute Modular system may change. Availability of finishes and equipment varies by region.

Interested in this unit? Ask for an offer →

Mute © 2026 All rights reserved

Modular | MUTE.

Name	Function	Room type	Modular size
Work 3x1 p2.v1.0	Work	Open	3x1

Dimensions

317 x 115 x 238 / 226 cm
124.8 x 45.28 x 93.7 / 88.97 in.

Description

This room for collaborative work provides space and calm for two people. It's equipped with dedicated furniture and accessories, finished with third-party fit-outs.

It is a part of Modular Work set – areas designed purposefully to offer comfort and privacy for the individual, focused work, or small collaborative sessions.

Colors

Construction

3x	solid wall module
2x	perforated metal wall module
1x	electric ceiling module
2x	solid ceiling module
2x	power distribution unit
√	control panel
√	integrated linear lamp

System furniture and accessories

2x	shallow shelf
1x	deep shelf with bookends
1x	two-drawer cabinet
2x	desk
2x	display rail
1x	magnet (2 pcs)
2x	wall hook

Sage Green

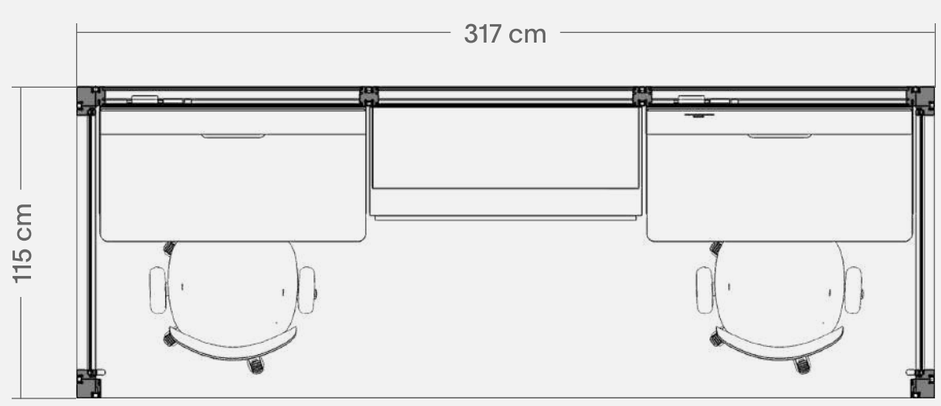

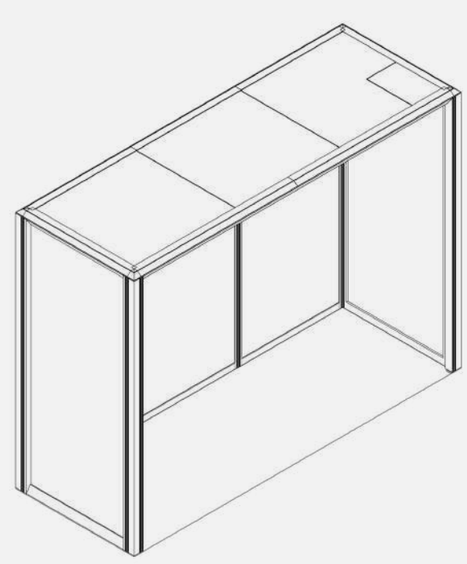

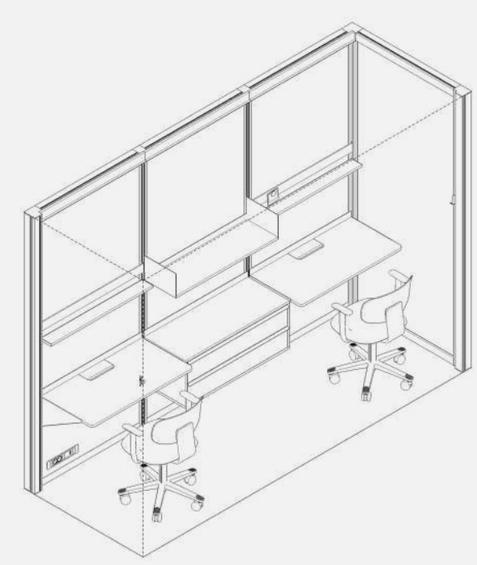

This visualization contains 3rd party products which are purely examplary and are not sold by Mute.
Presets like the one specified in this card can be combined into multifunctional hubs.
Elements of Mute Modular system may change. Availability of finishes and equipment varies by region.

Interested in this unit? Ask for an offer →

Mute © 2026 All rights reserved

Modular | MUTE.

Name	Function	Room type	Modular size
Lounge 3x2 p3.v1.0	Lounge	Open	3x2

Dimensions

317 x 216 x 238 / 226 cm
124.8 x 85.04 x 93.7 / 88.97 in.

Description

This room for relaxing provides space up to 3 people. It's equipped with dedicated furniture and accessories, finished with third-party fit-outs.

It is a part of Modular Lounge set – cozy areas for less-formal meet-ups and every casual occasion. Perfect for a waiting lounge, chill-out area, or gaming room.

Colors

Construction

3x	solid wall module
4x	perforated metal wall module
1x	electric ceiling module
5x	solid ceiling module
1x	power distribution unit
3x	Flask track lighting
√	control panel
√	integrated linear lamp

System furniture and accessories

1x	shallow shelf
4x	deep shelf
1x	deep shelf, right bookend
2x	sliding door cabinet
1x	desk 100
1x	whiteboard
1x	display rail
2x	magnet (2 pcs)
2x	wall hook

Clay Red

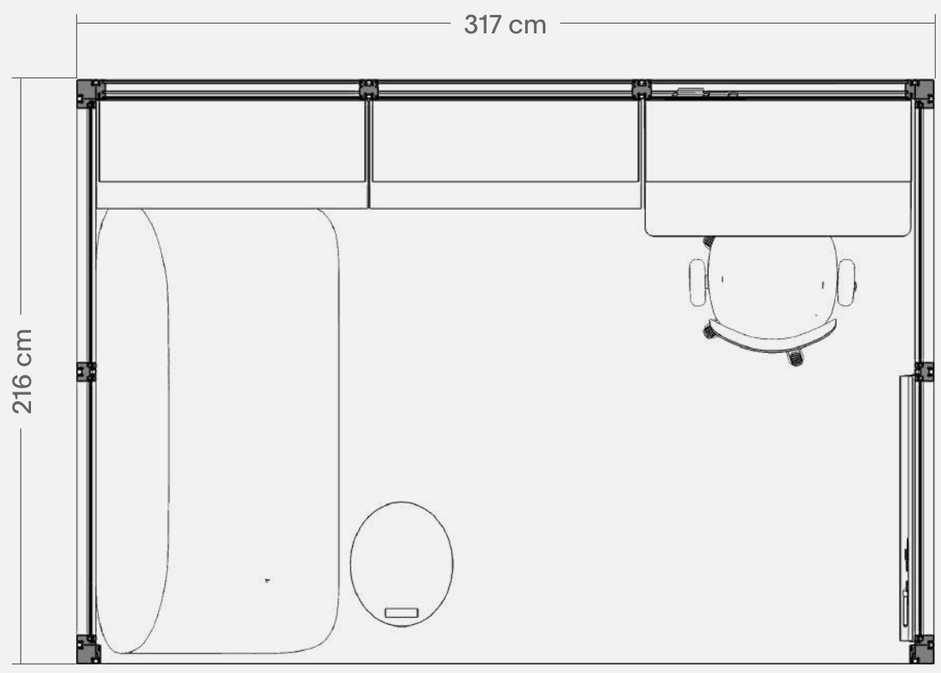

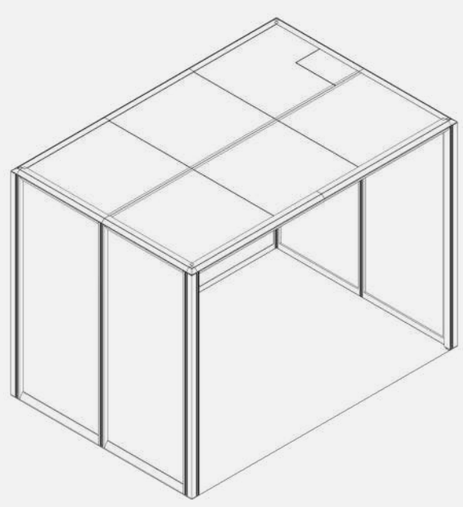

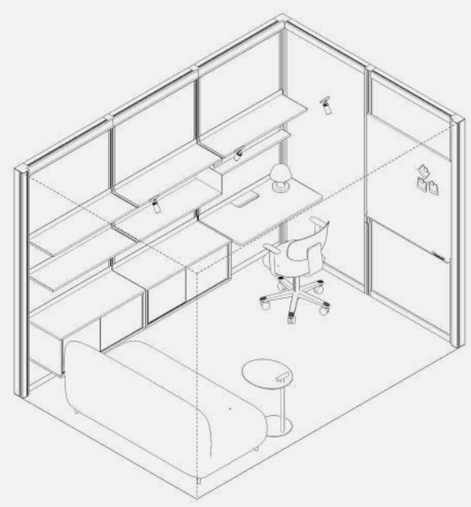

This visualization contains 3rd party products which are purely examplary and are not sold by Mute.
Presets like the one specified in this card can be combined into multifunctional hubs.
Elements of Mute Modular system may change. Availability of finishes and equipment varies by region.

Interested in this unit? Ask for an offer →

Mute © 2026 All rights reserved

Modular | MUTE.

Name	Function	Room type	Modular size
Meet 3x2 p4.v1.O	Meet	Open	3x2

Dimensions

317 x 216 x 238 / 226 cm
124.8 x 85.04 x 93.7 / 88.97 in.

Description

This room for meetups provides space up to 4 people. It's equipped with dedicated furniture and accessories, finished with third-party fit-outs.

It is a part of Modular Meet set – areas in plenty of sizes and capacities to host any gathering: team meet-ups, brainstorms, workshops, small talks, and more.

Colors

Construction

3x	solid wall module
4x	fluted glass wall module
1x	electric ceiling module
6x	solid ceiling module
1x	power distribution unit
1x	Mika track lighting
2x	Flask track lighting
√	control panel
√	integrated linear lamp

System furniture and accessories

2x	shallow shelf
2x	whiteboard
3x	display rail
4x	display rail hook
1x	magnet (2 pcs)

Clay Red

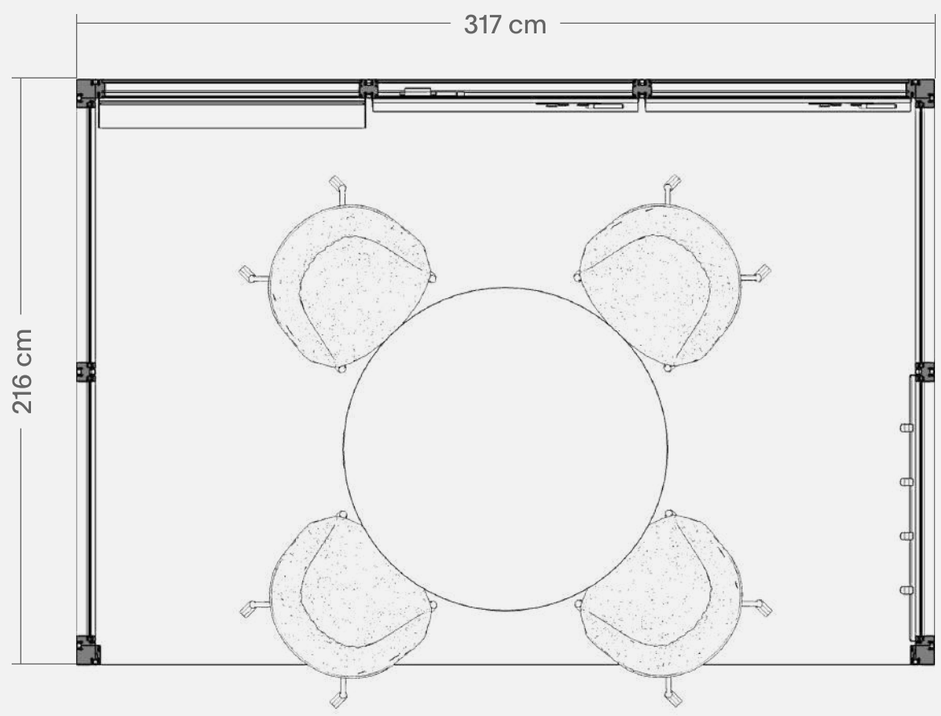

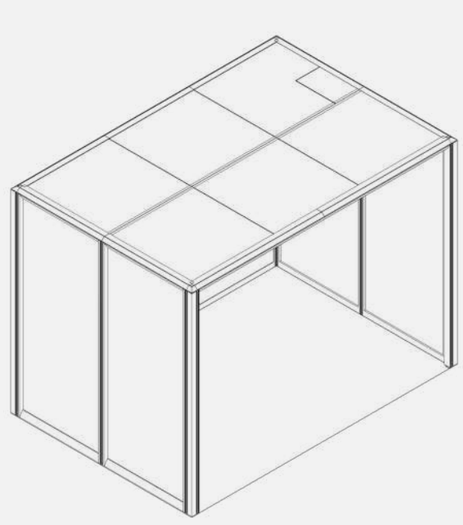

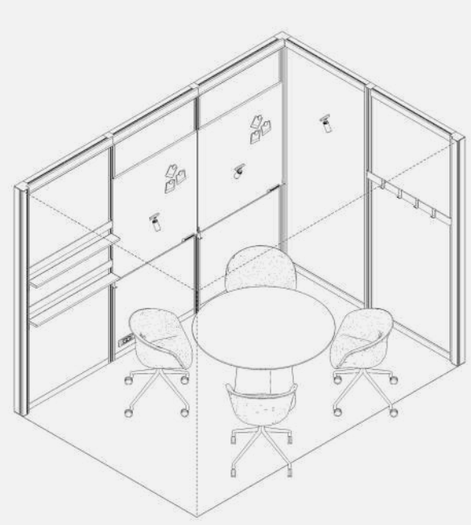

This visualization contains 3rd party products which are purely examplary and are not sold by Mute.
Presets like the one specified in this card can be combined into multifunctional hubs.
Elements of Mute Modular system may change. Availability of finishes and equipment varies by region.

Interested in this unit? Ask for an offer →

Mute © 2026 All rights reserved

Modular | MUTE.

Name	Function	Room type	Modular size
Work 3x2 p4.v1.0	Work	Open	3x2

Dimensions

317 x 216 x 238 / 226 cm
124.8 x 85.04 x 93.7 / 88.97 in.

Description

This room for collaborative work provides space and calm for four people. It's equipped with dedicated furniture and accessories, finished with third-party fit-outs.

It is a part of Modular Work set – areas designed purposefully to offer comfort and privacy for the individual, focused work, or small collaborative sessions.

Colors

Construction

3x	solid wall module
4x	perforated metal wall module
1x	electric ceiling module
5x	solid ceiling module
1x	power distribution unit
3x	Flask track lighting
√	control panel
√	integrated linear lamp

System furniture and accessories

3x	shallow shelf
1x	whiteboard
3x	display rail
4x	display rail hook
2x	magnet (2 pcs)
2x	wall hook
1x	display stand

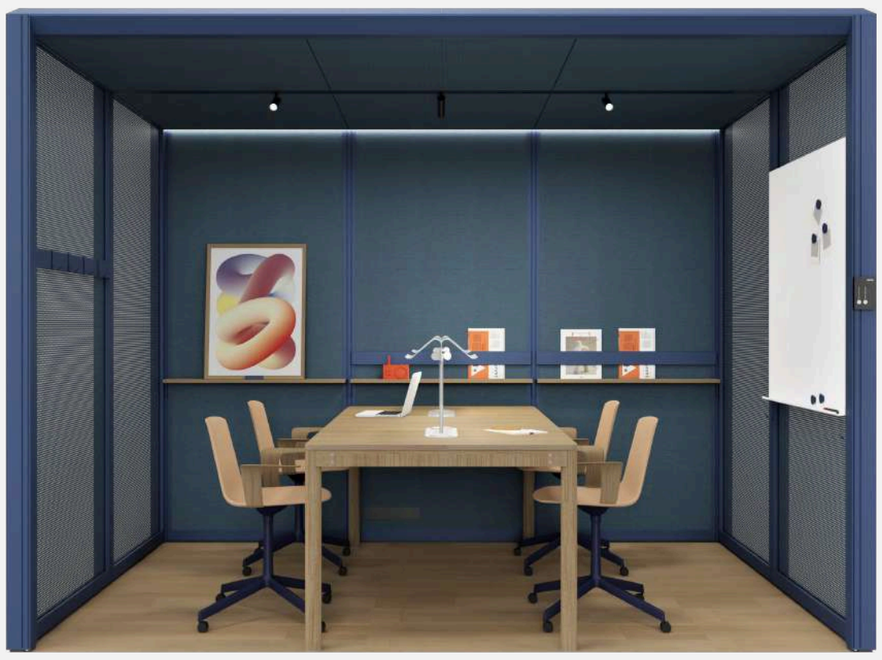

Ink Blue

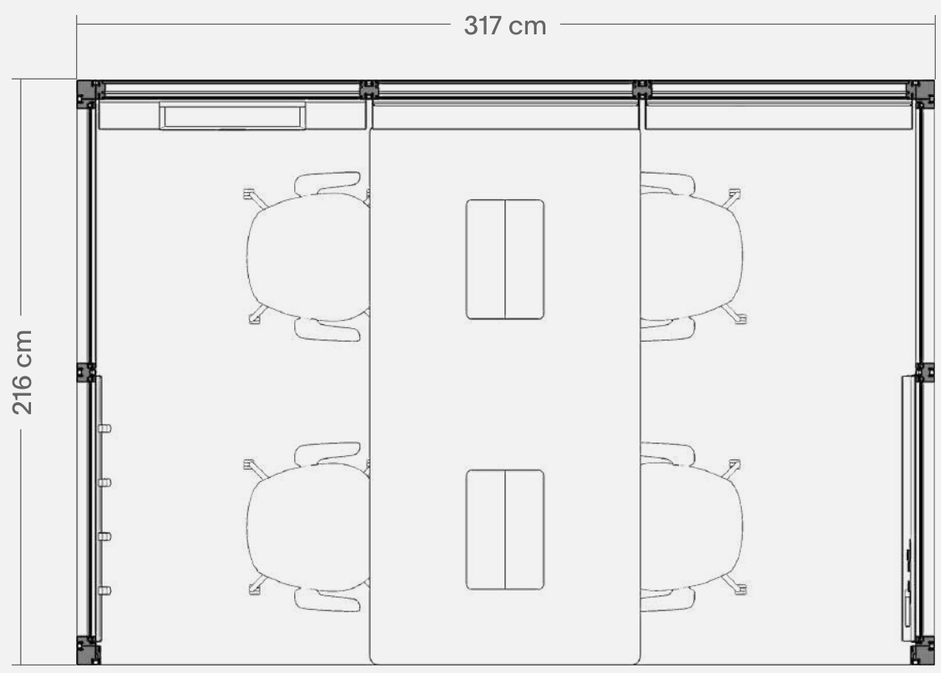

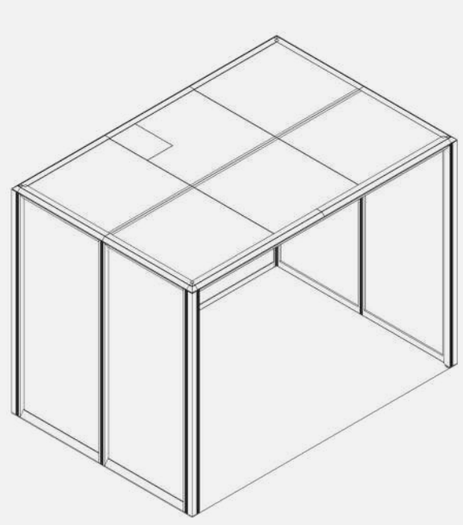

This visualization contains 3rd party products which are purely examplary and are not sold by Mute.
Presets like the one specified in this card can be combined into multifunctional hubs.
Elements of Mute Modular system may change. Availability of finishes and equipment varies by region.

Interested in this unit? Ask for an offer →

Mute © 2026 All rights reserved

Showrooms

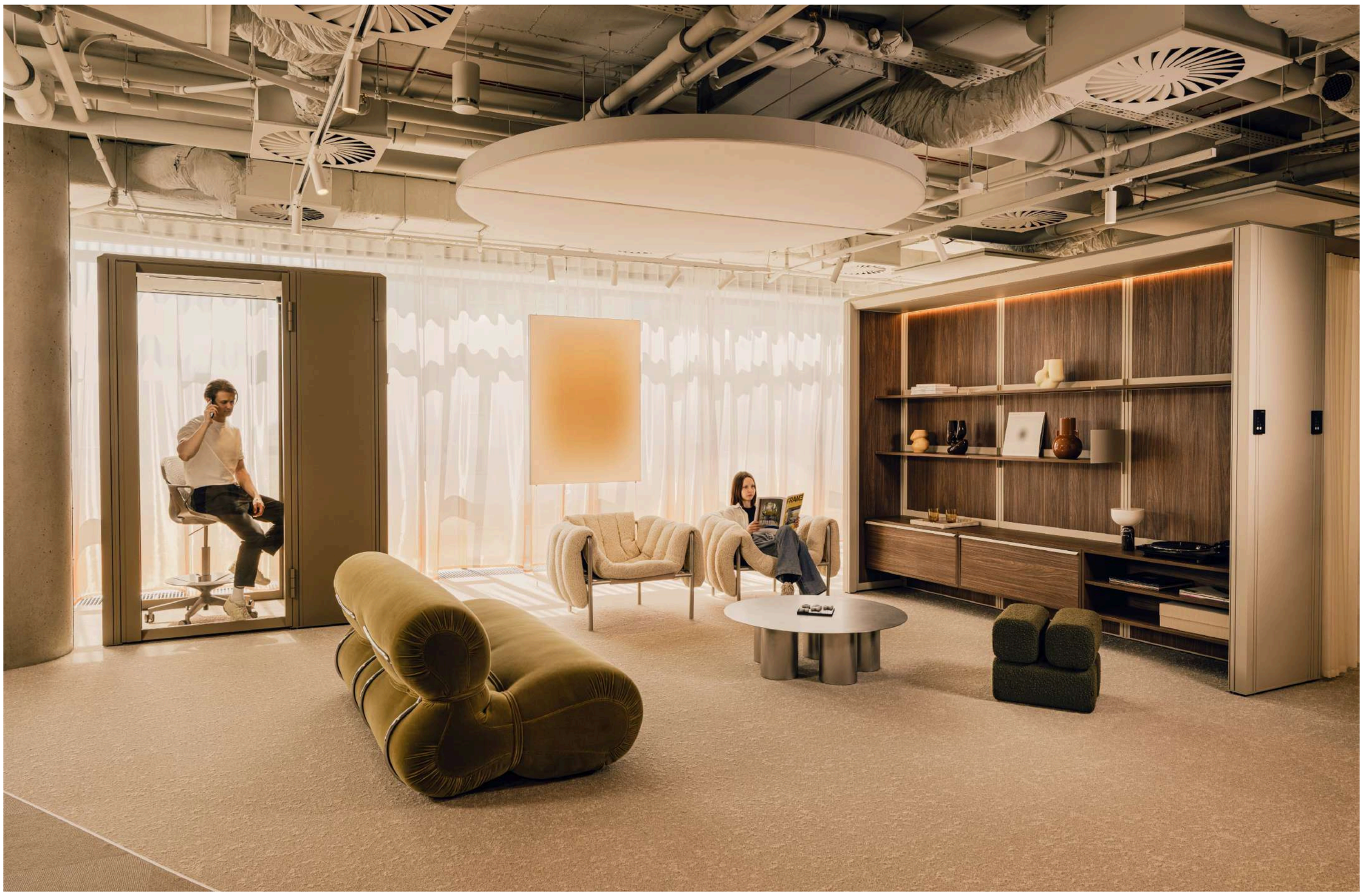

Warsaw, Poland

Domaniewska 34A
6th floor of Ambassador

New York, USA

1140 Broadway
15th floor

London, UK

32 Great Sutton Street
1st floor

Düsseldorf, Germany

Zollhof 17
Medienhafen

Munich, Germany

Lilienthalstraße 2A / Haus 7
85399 Hallbergmoos

Paris, France

Tour Montparnasse
33 Avenue Du Maine

Milan, Italy

Via Tortona 31
Archiproducts Showroom

Galew, Poland

Galew 22
62-720

Mute © 2026 All rights reserved

Modular | MUTE.

See more at:

www.mutemodular.com